NORTH COAST RESOURCE PARTNERSHIP

A. General Project Information

1. Organization / Project Sponsor Name:
   Covelo Community Services District (CCSD)

2. Project Name:
   Covelo CSD Collection System and WWTP Improvements (Phase 2)

3. Has the organization implemented similar projects in the past? ☒ yes ☐ no

4. If the project sponsor has worked with NCRP in the past, describe the project and outcome.
   CCSD has previously worked with the NCRP and has received Proposition 50 and Prop 1 Round 1 funding previously. The current Prop 1 work has resulted in a full system design, however the project was phased due to funding constraints.

5. Please describe the qualifications, experience, and capacity of the project team that will be overseeing project implementation.
   CCSD and GHD Inc. have previously worked with the NCRP. GHD has completed and monitored multiple state funded sewer infrastructure projects and PV systems.

6. Is this project part of a larger project or program? If so, what effectiveness monitoring is being conducted and what are the results?
   Yes, this project is phase 2 of the Covelo CSD Collection System and WWTP Improvements Project. Phase 1 monitoring included review of the project plans to ensure reliable sewer conveyance that will reduce I/I, and energy use. Summing all the I&I discussed in the 4 areas of concern, this project aims to reduce approximately 0.2 MGD of wet weather I&I. This, for a plant with ADF around 0.03 to 0.04 MGD and max flows around 0.35 MGD, means addressing over 65% of the I&I entering the system.

7. Project Abstract [500 characters max.]
   Reducing I&I into the collection system will ease the burden of extremely high flows through the WWTP during winter/rainy periods. When flows are high, not only is the treatment often insufficient, but the plant may be forced to surface water discharge effluent into the nearby Grist Creek, as happened in 2017 (failed toxicity test), reducing water quality. Another part of this project is to add power resiliency through a new PV power source and Ozone equipment protection to improve operations.

8. Project Description [3,000 characters max.]
   The I&I portion of the project tackles several areas of the collection system (CS) that were not included in the 2008 CS upgrade. All 4 portions of the CS that are included have been

specifically identified as areas with significant I&I by CCSD's operator using CCSD's CCTV equipment and visual inspection.

The project is phased with Phase 1 including the following items:

1: 502 LF of old ACP along Commercial Street, which was not replaced in 2008. This section has been observed contributing approximately 40 gpm I&I into the CS. Also, this section is without a midpoint MH, prohibiting CCSD from CCTVing this full segment. Thus, this phase would replace the 502 LF of 6"ACP with 8" SDR-35.

2: East Lane (not replaced in 2008). A 217 LF portion of this East Lane sewer has been identified as contributing approximately 20 gpm I&I to the CS. In addition to this segment, there are 3 MHs which exhibit significant I&I. Thus, this phase would replace the 195 LF of 6" ACP with 6" SDR-35

Phase 2 of this project will include the following items:

1: 1,100 LF along the far South end of Commercial St and towards the WWTP. This section has been observed contributing approximately 40 gpm I&I into the CS. Also, within this 1,100 LF segment are 4 manholes, which are visibly allowing I&I into CS. All of these MHs are over 60 years old and should be replaced. Thus, this phase would replace 8-4" ACP laterals with 4" SDR-35.

2: 600 LF of sewer main on Commercial St was replaced during the 2008 upgrade. Unfortunately, the ROW portions of the laterals along this main were not replaced; recent inspections have concluded that approximately 40 GPM I&I is coming from these 60+ year old laterals. Thus, this phase would replace (9) 4" ACP laterals with 4" SDR-35 from the mainline to the cleanouts.

3: Phase 2 will add a MH in the middle of the old ACP section along Commercial Street to be replaced under Phase 1.

4: Replace three existing MH along the East Ln section to be replaced in Phase 1.

5: Phase 2 would replace the 22 LF of 6" ACP with 6" SDR-35 along East Ln.

6: Phase 2 of this project will also include the construction of the ozone canopy withth solar panels over the disinfection equipment to protect the recently installed ozone equipment. The PV system will provide self-reliance and economics by saving on power costs, while reducing GHG emissions.

This applicaton is only for Phase 2 work.

9. Specific Project Goals/Objectives

Goal 1: Reduce Inflow and Infiltration Entering the Collection System. [100 characters max.]

Goal 1 Objective: Allow stormwater to recharge the groundwater instead of ending up at the WWTP. Also, during dry weather, these fixes will limit the amount of sewage leaking out of the pipes contaminating groundwater. [200 characters max.]

Goal 1 Objective: Reduce the amount of flow that needs to be handled/treated at the WWTP, reducing the extreme oversight of the WWTP that is currently required during wet weather, including bypass pumping at times.
Goal 1 Objective: Reduced flows will allow for better treatment at the WWTP
Goal 1 Objective: Reduce the chance of surface water discharge that could impact the aquatic ecosystem (as happened in 2017) & requires costly testing

Goal 2: Provide Improved Operation Capabilities and Function at the WWTP
Goal 2 Objective: Install a canopy over the ozone disinfection equipment to protect the recently installed, essential and expensive ozone equipment.
Goal 2 Objective: Install solar panels on the proposed canopy for the ozone to increase CCSD's self-reliance and economics by saving on power costs, while reducing GHG emissions.
Goal 2 Objective:
Goal 2 Objective:

Goal 3:
Goal 3 Objective:
Goal 3 Objective:
Goal 3 Objective: .
Goal 3 Objective:

Additional Goals & Objectives (List)

10. Describe how the project addresses the NCRP Goals and Objectives selected. [1,000 characters max.]

Obj 1: All components of this project are proposed by the CCSD, specifically the GM and the Wastewater Operator who have lived and worked in Covelo for decades and know the area, the watersheds and needs of the community.

Obj 2: Project further enhances progress made in a previous NCRP funded project

Obj 4: Project benefits the Community of Covelo, a SDAC

Obj 5, 6, 7: By addressing the I&I into the system, CCSD hopes to eliminate the need to surface water discharge (SWD).

Obj 11&12: The WWTP improvements will directly address lack of protection to the essential and expensive ozone equipment. Addition of solar panels at wwtp will promote local energy independence and mitigate CCSDs contribution to climate change by reducing GHG emissions.

11. Describe the physical, biological and/or community need for the project. [1,000 characters max.]

The CCSD is a rural, economically challenged community that is unable to provide the needed revenue and capital for upgrades to its sewage treatment system. These needed upgrades cause

increased operating costs each year. The collection system has I & I issues which compromise the treatment facility's capacity; thus, in some years, requiring the District to discharge to the creek. This process is extremely expensive in time and resources for the District. The last time surface discharge was required the District was forced to raise rates (in 2017) by $15 a month to offset the testing and administrative costs. In addition, this project is designed to decrease electricity costs by installing a solar system.

12. **Describe the financial need for the project**. [1,000 characters max.]

CCSD has maximized their capacity to take on any more loans as they still have 30 years to pay off the last one. The CCSD is unable to increase rates any more than they already have, given the severely economically depressed population which is served. A final note: The CCSD suffered a real loss in value of its system due to the design and construction errors which occurred during the previous repair and upgrade project. A total of $1.5M, for which they are still paying the loan.

13. **Describe potential adverse impacts from project implementation and how they will be mitigated.**

No potential adverse impacts. All work will be completed on previously disturbed area. Project increases performance on an annual basis.

14. **Will this project mitigate an existing or potential Cease and Desist Order or other regulatory compliance enforcement action?** ☐ yes ☒ no

If yes, please describe. [500 characters max.]

15. **Does the project address a contaminant listed in AB 1249 (nitrate, arsenic, perchlorate, or hexavalent chromium)?**

☐ yes ☒ no

If yes, provide a description of how the project helps address the contamination. [500 characters max.]

16. **Describe how the project contributes to regional water self-reliance and addresses climate change.** [1,000 characters max.]

The valley's aquifer is supplied and recharged only by the rains and snow melt which falls within the mountains that defines the valley. The entire valley uses this aquifer exclusively for all of its municipal, commercial, and agricultural needs. Covelo Community Services District provides the only other consistent groundwater recharge function. Though it is supplemental to the rain and snow melt, it is known that every source of water recharge is significant. The discharge permit allows CCSD to percolate into the aquifer with disinfected effluent via ozone. The District essentially produces discharge water that is cleaner than any of the valley's existing ground, surface, and recharge waters.

17. **Does the project increase public safety with regards to flood protection, wildfire hazard risk reduction, increasing firefighting capacity, or in other ways contribute to regional emergency resiliency?**

☒ yes ☐ no

Please explain. [500 characters max.]

With reduce the amount of I/I in the pipes reducing the risk of a sanitary sewer overflow. This will provide the city with flood protection and reduce the risk of contaminating the near by river.

18. **Does the project employ new or innovative technologies or practices, including Decision Support Tools that support the integration of multiple jurisdictions, including, but not limited to, water supply, flood control, land use, and sanitation?** ☒ yes ☐ no

If yes, please describe. [500 characters max.]

Yes, the District is one of the only wastewater treatment plants in California which uses ozone as it's disinfecting process. The electrical demand for such infrastructure is quite high, this project will provide a shade cover and solar panels for the ozone unit to create a carbon neutral sewage treatment facility.

19. **Describe the population served by this project, including any economically disadvantaged communities or Tribes that will directly benefit.**

The District's service population is approximately 430 with an estimated Median Household Income of $23,600, according to the US Census. The District is a disadvantaged community.

20. **Describe local and/or political support for this project.** [500 characters max.]

100% support because CCSD is under a District-wide, temporary, Mitigatable-Moratorium (MM) due in part to the winter I&I. And since the community has reached its limit for increasing monthly rates, the only way to mitigate these issues is through external funding. This MM has limited the ability of development, which has become a contentious issue for District members wanting to provide teacher, senior & affordable housing, cottage industries & small to medium scale commercial.

21. **List all collaborating partners and agencies and nature of collaboration.** [750 characters max.]

We are a Special District in an unincorporated part of Northeastern Mendocino County and our jurisdiction does not interface with many other agencies or public entities. As mentioned in 18 above, this project would address the issues which prompted the current MM and therefore, people within CCSD would be 100% supportive of the project, as they are very much in favor of being able to develop needed economic support facilities and industry and to eliminate any future rate increases.

22. **Is this project part or a phase of a larger project?** ☒ yes ☐ no
    Are there similar efforts being made by other groups? ☐ yes ☒ no
    If yes to either, please describe. [500 characters max.]
    The project was originally awarded in 2019. Due to Covid and other environmental factors construction costs have increased over the past years the project was phased. To maximize the efficiency and dollars the District would like to construct the entire project at the same time. Phase 1 will include replacing 502 LF of 6"ACP and replacing 195 LF of 6" ACP. Phase 2 work includes manhole, lateral and sewer line installation.

B. Project Location

1. **Describe the latitude and longitude of the project site.**
   Latitude: 39.786284 Longitude: -123.245080

2. **Site Address (if relevant):**
   75997 Covelo Rd, Covelo, CA 95428

3. **Does the applicant have legal access rights, easements, or other access capabilities to the property to implement the project?**
   ☒ yes If yes, please describe below
   ☐ no If no, please provide a concise narrative below with a schedule, to obtain necessary access
   ☐ NA If NA, please describe below why physical access to a property is not needed
   Explanation. [500 characters max.]
   All repairs will be made on previously installed sewer lines and the easments are owned by the District.

4. **Project Location Notes:**

C. Benefits To Disadvantaged Communities and/or Tribes

1. **Does the project provide direct water-related benefits to a project area comprised of Disadvantaged Communities or Economically Distressed Communities?** If partially, please estimate percentage of project that benefits disadvantaged communities and list the communities.
   ☒ Entirely

☐ Partially; estimate the percentage of benefits provided directly to DAC:
☐ No
List the Disadvantaged Community(s)
Covelo

2. Does the project provide direct water-related benefits to a project area comprised of Severely Disadvantaged Communities (SDAC)? If partially, please estimate percentage of project that benefits disadvantaged communities and list the SDACs.
☒ Entirely
☐ Partially; estimate percentage of benefits provided directly to SDAC:
☐ No
List the Severely Disadvantaged Community(s)
Covelo

3. Does the project provide direct water-related benefits to a Tribe or Tribes? If partially, please estimate percentage of project that benefits Tribe(s) and list the Tribes.
☐ Entirely
☐ Partially; estimate percentage of benefits provided directly to Tribe(s):
☒ No
List the Tribal Community(s)

If yes, please provide a letter of support from each Tribe listed as receiving these benefits.

4. If the project provides benefits to a DAC, EDA or Tribe, explain the water-related need of the DAC, EDA or Tribe and how the project will address the described need. [750 characters max.]
The Covelo WWTP had an upgrade in 2009 that addressed several of their concerns at the time. Unfortunately, some holes were left in the system. And after operating for 10 years post upgrades, those deficiencies have become increasingly obvious. The proposed project will correct issues within the collection system and protect equipment.

5. Describe the kind of notification, outreach and collaboration that has been completed with the county(ies) and/or Tribes within the proposed project impact area, including the source and receiving watersheds, if applicable. [500 characters max.]
As this proejct proposes to improve existing infrastructure, the main outreach has been coordination with the Regional Board to confirm approval of improvements.

D. Project Benefits & Justification

1. For each of the Potential Benefits that the project claims, complete the following table to describe an estimate of the benefits expected to result from the proposed project. Provide

quantitative benefit amounts for at least the primary and secondary benefits. Provide a qualitative narrative description of expected benefits that cannot be quantified. *See the NCRP Project Application Instructions for more information and a listing of potential benefits.*

PROJECT BENEFITS TABLE

Benefit Description	Units	Quantitative Amount	Qualitative Description
Water Supply			
Avoided Electrical Costs-Solar	kWh	39,680	18,000 US Dollars
Water Quality			
Ammonia Reduction	No Toxicity Violatio	Change in Conc	Meet permit limits
Climate Change			
Carbon Emissions Reductions from Reduced Electricity Use	39,680	kWh	US $ in CO2 Equiv
Other Ecosystem Service Benefits			
Jobs Created or Maintained			
Other Benefits			
Decreased Operation and Maintenance			Project Specific

Benefit Description	Units	Quantitative Amount	Qualitative Description

2. Does the proposed project provide physical benefits outside of the North Coast Region?
   ☐ yes ☒ no
   If yes, describe the impacts to areas outside the North Coast Region. [500 characters max.]

3. List the impaired water bodies (303d listing) that the project benefits:
   Grist Creek is part of the Eel River HU, Middle Fork HA, Eden Valley and Round Valley HSAs. This waterbody is listed as impaired by temperature and sediment siltation on the 2014-2016 303(d) list.Causes include Flow Alteration/Regulation/Modification, Nonpoint Source, Removal of Riparian Vegetation, Erosion/Siltation, Flow Alteration/Regulation/Modification, and Removal of Riparian Vegetation. TMDL development is still planned to address these impairments.

4. Describe how the project benefits salmonids, endangered/threatened species and sensitive habitats.
   If the I&I is reduced, as proposed, the need to perform a surface water discharge is expected to be eliminated. Therefore, wastewater with toxic ammonia levels will not be directly entering the habitats.

5. Have alternative methods been considered to achieve the same types and amounts of physical benefits as the proposed project?
   ☒ yes ☐ no
   Please explain. [500 characters max.]
   District considered other technlogies such as pipe lining and pipe bursting, but due to age and material of the pipe it made economic sense to replace the manholes and sewer lines.

6. Is the proposed project the lowest cost alternative to achieve the physical benefits?
   ☒ yes ☐ no
   Please explain. [500 characters max.]
   Due to the existing pipe material and age it was determined that pipe replacement maintained the needed capacity and resulted in lowest life cycle costs.

7. How will the project be monitored to determine whether it is producing the desired benefits?
   The District will monitor of inflow and infiltration through flow records and rainfall considerations to ennsure project desired benefits. Regular mantenance will include inspection

of manholes and valves. Solar panels project monitoring will include monthly power production comparison to expect results.

8. Provide a narrative for project technical justification. Include any other information that supports the justification for this project, including how the project can achieve the claimed level of benefits listed below. [3,000 characters max.]
   The District conducted CCTVing through the collection system and also conducted visual inspections. The I&I project addresses the identified high priority areas as identified by CCSD inspection work. The District failed acute toxicity testing in 2017 during periods of high rainfall due to high levels of ammonia in the District effluent, which was cuased by high I&I into the collection system and short circuiting within the treatment ponds. The District work with a solar installer to evaluate the benefits of solar to the operation of the WWTP, with findings that much of the power needs could be met with the solar system installed over the ozone unit. In the supporting attachments, the overall project locations are identified in Exhibit A: Project Areas. The final design plans for Phase 1 and Phase 2 work are included in Exhibit B.

9. List and include any studies, plans, designs or engineering reports completed for the project as a "Technical & Reference Supporting Materials" into one document that includes a Table of Contents and is limited to approximately 50 pages. *Please see the instructions for more information about submitting these documents with the final application.*

10. Project Justification & Technical Basis Notes: Please provide any additional information *not included above* that you think is important.
    The project plans attached to this application include work for phase 1 and phase 2. This application is for phase 2 work, but for maximum time and dollar effiency, the District would like to construct both phases at the same time.

E. Project Tasks, Budget, And Schedule

1. Projected Project Start Date: 3/1/23
   Anticipated Project End Date: 1/31/24

2. Describe the basis for the costs used to derive the project budget in each budget category. [500 characters max.]
   Category A tasks' cost are based on hourly rates and anticipated effort of CCSD staff and engineering consultant for porject administration costs. Category A costs are funded by NCRP Prop 1 Round 1 grant . Category C tasks' costs our based on Engineer's Estimate for tasks for similar projects and has been funded by the NCRP Prop 1 and the tasks are completed. Category D tasks' costs are based on costs received during the bid process, esclated for inflation based on the construction start date.

3. **Provide a narrative on cost considerations including alternative project costs.** [500 characters max.]
   The work within the collection system is fairly straightforward, as it is replacement in kind. The dual use of the ozone canpoy with PV makes effective use of materials for these improvements.

4. **List the sources of non-state matching funds, amounts and indicate their status**. Proposition 1 requires a minimum cost share of 50% of the total project costs, though a waiver may apply (see Question 6 below).
   N/A

5. **List the sources and amount of State matching funds.**
   North Coast Resource Partnership Prop 1 Round 1.

6. **Cost Share Waiver Requested (DAC or EDA)?** ☒ yes ☐ no
   Describe what percentage of the proposed project area encompasses a DAC/EDA, how the community meets the definition of a DAC/EDA, and the water-related need of the DAC/EDA that the project addresses. In order to receive a cost share waiver, the applicant must demonstrate that the project will ***directly*** provide benefits that address a water-related need of a DAC/EDA.
   100%

7. **Is the project budget scalable?** ☒ yes ☐ no

8. **Describe how a scaled budget would impact the overall project,** its expected benefits and state the minimum budget amount that would be viable (see Instructions E.7 for scaled budget examples). [500 characters max.]
   Phase 2 includes 4-inch Laterals with Cleanout , Ozone Canopy, manhole replacement, a new manhole and the rest of the 6" sewer line. Yes the project is scalable, but less dollars will mean less work is completed. All upgrades are essential for improving the functionality of the collection system.

9. **Major Tasks, Schedule and Budget for Project Solicitation**
   Please complete MS Excel table available at https://northcoastresourcepartnership.org/ncrp-proposition-1-irwm-round-2-solicitation/see instructions for the information to be included in this document and for how to submit the required excel document with the application materials.

10. **Project Tasks, Budget and Schedule Notes:**

Project Name: CCSD Collection System and WWTP Improvement
Organization Name: Covelo Community Services District

Task #	Major Tasks	Task Description	Major Deliverables	IRWM Task Budget	Non-State Match	Other Match (Prop 1 Round 1)	Total Task Budget	25% Scaled IRWM Budget	50% Scaled IRWM Budget	Current Stage of Completion (%)	Start Date	Completion Date
A	**Category (a): Direct Project Administration**											
1, 2	Project Management, Reporting	In cooperation with the County of Humboldt sign a sub-grantee agreement for work to be completed on this project. Develop invoices with support documentation. Provide audited financial statements and other deliverables as required. Develop monthly reports describing work completed, challenges, and strategies for reaching remaining project objectives. Develop Final Report	Invoices, audited financial statements and other deliverables as required. Quarterly and Final Reports	$0.00	$0.00	$28,700.00	$0.00	$0.00	$0.00	60%	7/1/20	1/31/24
3				$0.00	$0.00	$0.00	$0.00	$0.00	$0.00	0%		
B	**Category (b): Land Purchase/Easement**											
1				$0.00	$0.00	$0.00	$0.00	$0.00	$0.00	0%		
C	**Category (c): Planning/Design/Engineering/Environmental Documentation**											
1,2,3	Final Design /Plans, Project Performance Monitoring Plan, Environmental Documentation: CEQA	Final Design Plans and specifications, Develop Monitoring Plan to include goals and measurable objectives. A NOE was filed for this project with Mendicino County in February 11, 2021.	Final design plans, Final specifications, Final Monitoring Plan Completed in Phase 1, Environmental Information Form approved by DWR; Completed in Phase 1	$0.00	$0.00	$87,626.00	$87,626.00	$0.00	$0.00	100%		Complete
4	Environmental Documentation: NEPA (if required)	N/A		$0.00	$0.00	$0.00	$0.00	$0.00	$0.00	0%		
5	Permit Development [PLEASE COMPLETE]	N/A		$0.00	$0.00	$0.00	$0.00	$0.00	$0.00	0%		
D	**Category (d): Construction/Implementation**											
1	Contract Services	Develop advertisement for bids and contract documents; conduct pre-bid contractors meeting; perform evaluation of bids; award contract	Bid Documents; Proof of Advertisement; Award of Contract; Notice to Proceed	$0.00	$0.00	$3,000.00	$3,000.00	$0.00	$0.00	100%		Complete
2	Construction Administration	Construction management and inspection.	Construction Management Logs; Completed construction administration tasks documented in monthly progress reports; DWR Certificate of Project Completion	$115,600.00	$0.00	$63,326.00	$178,926.00	$86,700.00	$0.00	0%	3/1/23	10/30/23
3	Mobilization, Demobilization, and Site Preparation	Prepare Site and mobilize project:1. Initiate project site preparation; 2. Order project equipment and supplies; 3. Assure project permits are in place; 4. Conduct pre-project site photo-monitoring; 4. Traffic control 5. Demobilization		$0.00	$0.00	$120,854.00	$120,854.00	$0.00	$0.00	0%	3/1/23	10/30/23
4	Project Construction/Implementation:	The implementation of the Phase 2 items which include 4-inch Laterals with Cleanout , Ozone Canopy with solar panels, manhole replacements, a new manhole and the rest of the 6" sewer line. Phase 1 items, which will be implemented with NCRP Prop 1 Round 1 funds, incldue 502 LF of 8" pipe and 195 LF of 6" pipe.	Summary of construction activities in monthly progress report; Photo documentation; Construction completed	$740,533.00	$0.00	$472,872.00	$1,213,405.00	$555,399.75	$0.00	0%	3/1/23	10/30/23
5	Project Construction/Implementation:	N/A		$0.00	$0.00	$0.00	$0.00	$0.00	$0.00	0%		
6	Project Signage	Project Sign	Site photos	$0.00	$0.00	$3,639.00	$3,639.00	$0.00	$0.00	0%	3/1/23	4/1/23
7	Project Close Out, Inspection	Inspect project components and establish that work is complete. Verify that all project components have been installed and are functioning as specified will be conducted as part of construction inspection and project closeout. Conduct project completion photo monitoring. Prepare record drawings.	As-Built and Record Drawings; Project completion site photos	$11,250.00	$0.00	$11,400.00	$22,650.00	$8,437.50	$0.00	0%	10/30/23	12/1/23
8	Project Performance Monitoring	The performance of the project will be monitored in accordance to the Monitoring Plan using the following measurement tools and methods: monitor of inflow and infiltration through flow records and rainfall considerations to ennsure project desired benefits. Regular mantenance will include inspection of manholes and valves. Solar panels project monitoring will include monthly power production comparison to expect results.		$2,000.00	$0.00	$0.00	$2,000.00	$1,500.00	$0.00	0%	12/1/23	1/31/24
	Total North Coast Resource Partnership IRWM Grant Request			**$869,383.00**	**$0.00**	**$791,417.00**	**$1,632,100.00**	**$652,037.25**	**$0.00**			
	Percentage of Total Project Cost			**53%**	**0%**	**48%**	**100%**	**40%**	**0%**			

BUDGET DETAIL

Row (a) Direct Project Administration Costs					
Project Management Type	Personnel by Discipline	Number of Hours	Hourly Wage	% of Cost *	Total Admin Cost
Labor					
Materials					
Equipment					
Total					
* What is the percentage based on (including total amounts)?		n/a			
* How was the percentage of cost determined?		n/a			

Row (b) Land Purchase/Easement

Row (c) Planning/Design/Engineering & Environmental Documentation					
Personnel (Discipline)	Major Task Name	Number of Hours	Hourly Wage	Total Cost	
Total					

Row (d) Construction/Implementation				
Personnel (Discipline)	**Work Task and Sub-Task (from Work Task Table)**	**Number of Hours**	**Hourly Wage**	**Total Cost**
Phase 1 Costs				
Construction Management	Construction Administration	274	200	$54,800
Project Closeout	Project Close Out, Inspection	76	$150	$11,400
Phase 2 Costs				
Construction Management	Construction Administration	578	200	$115,600
Project Closeout	Project Close Out, Inspection	75	$150	$11,250
Materials and Equipment	**Work Task and Sub-Task (from Work Task Table)**	**Number of Units**	**Unit Cost**	**Total Cost**
Phase 1 Costs				
8-inch PVC Sewer (paved) Commercial St	Project Construction/Implementation	502	$ 577	$289,805
6-inch PVC Sewer (unpaved) East Ln	Project Construction/Implementation	195	$ 224	$43,729
Mobilization/Demobilization	Mobilization, Demobilization, and Site	1	$ 76,671	$76,671
Traffic Control Plan	Mobilization, Demobilization, and Site	1	$ 44,183	$44,183
Project Signage	Project Signage	1	$ 3,639	$3,639
Phase 2 Costs				
4-inch Laterals with Cleanout between (E) MH-15 and (E) MH-13 South Commercial	Project Construction/Implementation	8	$ 18,193	$145,544
Ozone Canopy	Project Construction/Implementation	1	$ 214,418	$214,418
PV System	Project Construction/Implementation	1	$ 115,656	$115,656
Replace Manhole 60 (MH-60) East Ln	Project Construction/Implementation	1	$ 27,290	$27,290
Replace Manhole 62 (MH-62) East Ln	Project Construction/Implementation	1	$ 25,990	$25,990
Replace 4-inch Laterals with Cleanout between (E) MH-57 and (E) MH-28	Project Construction/Implementation	3	$ 10,916	$32,747
6-inch PVC Sewer (unpaved) East Ln	Project Construction/Implementation	22	$ 689	$15,152
Replace Manhole 59 (MH-59) East Ln	Project Construction/Implementation	1	$ 38,985	$38,985
New Manhole 56 (MH-56) Commercial St	Project Construction/Implementation	1	$ 35,087	$35,087
Replace 4-inch Laterals with Cleanout between (E) MH-57 and (E) MH-28	Project Construction/Implementation	6	$ 14,944	$89,666
Total				**$740,533**

NORTH COAST RESOURCE PARTNERSHIP

ORGANIZATION INFORMATION

1. **Project Name:**
   Covelo CSD Collection System and WWTP Improvements (Phase 2)

2. **Applicant Organization Name:**
   Covelo Community Services District (CCSD)

3. **Contact Name/Title**
   Name: Dane Downing
   Title: General Manager
   Email: covelocsd@hotmail.com
   Phone Number (include area code): (707) 983-6888

4. **Organization Address (City, County, State, Zip Code):**
   P.O. Box 65, Covelo, CA 95428

5. **Organization Type**
   ☒ Public agency
   ☐ 501(c)(3) Non-profit organization
   ☐ Public utility
   ☐ Federally recognized Indian Tribe
   ☐ California State Indian Tribe listed on the Native American Heritage Commission's California Tribal Consultation List
   ☐ Mutual water company
   ☐ Other:

6. **Authorized Representative** (if different from the contact's name)
   Name:
   Title:
   Email:
   Phone Number (include area code):

7. **List all projects the organization is submitting to the NCRP for this Solicitation in order of priority.**
   N/A

8. **Organization Information Notes:**

ELIGIBILITY

1. North Coast Resource Partnership Goals and Objectives

GOAL 1: INTRAREGIONAL COOPERATION & ADAPTIVE MANAGEMENT

☒ Objective 1 - Respect local autonomy and local knowledge in Plan and project development and implementation

☒ Objective 2 - Provide an ongoing framework for inclusive, efficient intraregional cooperation and effective, accountable NCRP project implementation

☐ Objective 3 - Integrate Traditional Ecological Knowledge in collaboration with Tribes to incorporate these practices into North Coast Projects and Plans

GOAL 2: ECONOMIC VITALITY

☒ Objective 4 - Ensure that economically disadvantaged communities are supported and that project implementation enhances the economic vitality of disadvantaged communities by improving built and natural infrastructure systems and promoting adequate housing

☒ Objective 5 - Conserve and improve the economic benefits of North Coast Region working landscapes and natural areas

GOAL 3: ECOSYSTEM CONSERVATION AND ENHANCEMENT

☒ Objective 6 – Conserve, enhance, and restore watersheds and aquatic ecosystems, including functions, habitats, and elements that support biological diversity

☒ Objective 7 - Enhance salmonid populations by conserving, enhancing, and restoring required habitats and watershed processes

GOAL 4: BENEFICIAL USES OF WATER

☐ Objective 8 - Ensure water supply reliability and quality for municipal, domestic, agricultural, Tribal, and recreational uses while minimizing impacts to sensitive resources

☐ Objective 9 - Improve drinking water quality and water related infrastructure to protect public health, with a focus on economically disadvantaged communities

☐ Objective 10 - Protect groundwater resources from over-drafting and contamination

GOAL 5: CLIMATE ADAPTATION & ENERGY INDEPENDENCE

☒ Objective 11 - Address climate change effects, impacts, vulnerabilities, including droughts, fires, floods, and sea level rise. Develop adaptation strategies for local and regional sectors to improve air and water quality and promote public health

☒ Objective 12 - Promote local energy independence, water/ energy use efficiency, GHG emission reduction, and jobs creation

GOAL 6: PUBLIC SAFETY

☐ Objective 13 - Improve flood protection, forest and community resiliency to reduce the public safety impacts associated with floods and wildfires

2. Does the project have a minimum 15-year useful life?
   a) ☒ yes ☐ no
   b) If yes, will the organization be able to provide compliance documentation outlined in the instructions should the project be selected as a Priority Project?
      ☒ yes ☐ no

3. Other Eligibility Requirements and Documentation

CALIFORNIA GROUNDWATER MANAGEMENT SUSTAINABILITY COMPLIANCE

a) Does the project directly affect groundwater levels or quality?
   ☒ yes ☐ no
b) If yes, will the organization be able to provide compliance documentation outlined in the instructions including a Groundwater Sustainability Agency letter of support, to include in the NCRP Regional Project Application should the project be selected as a Priority Project?
   ☒ yes ☐ no

CASGEM COMPLIANCE

a) Does the project overlie a medium or high groundwater basin as prioritized by DWR?
   ☐ yes ☒ no
b) If yes, list the groundwater basin and CASGEM priority:
c) If yes, please specify the name of the organization that is the designated monitoring entity:
d) If yes, please specify whether the local Groundwater Sustainability Agency has endorsed the project:

URBAN WATER MANAGEMENT PLAN

a) Is the organization required to file an Urban Water Management Plan (UWMP)?
   ☐ yes ☒ no
b) If yes, has DWR verified the current 2020 UWMP?
   ☐ yes ☐ no
c) If the 2020 UWMP has not been verified by DWR, explain and provide anticipated date for verification:
d) Has DWR verified a water loss audit report in accordance with SB 555 as submitted by the urban water supplier?
   ☐ yes ☐ no
e) Does the urban water supplier meet the water meter requirements of CWC 525?
   ☐ yes ☐ no
f) Does the urban water supplier meet the State Water Resources Control Board's Water Conservation and Production Reporting requirement?
   ☐ yes ☐ no

g) If yes, will the organization be able to provide compliance documentation outlined in the instructions, to include in the NCRP Regional Project Application should the project be selected as a Priority Project?

☐ yes ☐ no

AGRICULTURAL WATER MANAGEMENT PLAN

a) Is the organization – or any organization that will receive funding from the project – required to file an Agricultural Water Management Plan (AWMP)?

☐ yes ☒ no

b) If yes, will the organization be able to provide compliance documentation outlined in the instructions, to include in the NCRP Regional Project Application should the project be selected as a Priority Project?

☐ yes ☐ no

SURFACE WATER DIVERSION REPORTS

a) Is the organization required to file State Water Resources Control Board (SWRCB) annual surface water diversion reports per the requirements in CWC Part 5.1?

☒ yes ☐ no

b) If yes, will the organization be able to provide compliance documentation outlined in the instructions, to include in the NCRP Regional Project Application should the project be selected as a Priority Project?

☒ yes ☐ no

STORM WATER MANAGEMENT PLAN

a) Is the project a stormwater and/or dry weather runoff capture project?

☐ yes ☒ no

b) If yes, does the project benefit a Disadvantaged Community with a population of 20,000 or less?

☐ yes ☐ no

c) If this is a stormwater/dry weather runoff project but does not benefit a small DAC population, please provide documentation that the project has been included in a Stormwater Resource Plan that has been incorporated into the NCRP IRWM Plan:

d) If no, will the organization be able to provide documentation that the project is included in a Stormwater Resource Plan that has been incorporated into the NCRP IRWM Plan, should the project be selected as a Priority Project?

☐ yes ☐ no

4. Eligible Project Type under 2022 IRWM Grant Solicitation
   - ☐ Water reuse and recycling for non-potable reuse and direct and indirect potable reuse
   - ☐ Water-use efficiency and water conservation
   - ☐ Local and regional surface and underground water storage, including groundwater aquifer cleanup or recharge projects
   - ☐ Regional water conveyance facilities that improve integration of separate water systems
   - ☒ Watershed protection, restoration, and management projects, including projects that reduce the risk of wildfire or improve water supply reliability
   - ☐ Stormwater resource management projects to reduce, manage, treat, or capture rainwater or stormwater
   - ☐ Stormwater resource management projects that provide multiple benefits such as water quality, water supply, flood control, or open space
   - ☐ Decision support tools that evaluate the benefits and costs of multi-benefit stormwater projects
   - ☐ Stormwater resource management projects to implement a stormwater resource plan
   - ☐ Conjunctive use of surface and groundwater storage facilities
   - ☐ Decision support tools to model regional water management strategies to account for climate change and other changes in regional demand and supply projections
   - ☒ Improvement of water quality, including drinking water treatment and distribution, groundwater and aquifer remediation, matching water quality to water use, wastewater treatment, water pollution prevention, and management of urban and agricultural runoff
   - ☐ Regional projects or programs as defined by the IRWM Planning Act (Water Code §10537)
   - ☐ Other:

5. Describe how the project provides a benefit that meets at least one of the Statewide Priorities as defined in DWR's Final 2022 Guidelines (see page 7) and Tribal priorities as defined by the NCRP?

   The project meets the Climate Resilience and the Strengthen partnerships with local, federal, and Tribal governments, water agencies and irrigation districts, and other stakeholders Statewide Priorities. The addition of solar panels at wwtp will promote local energy independence and mitigate CCSDs contribution to climate change by reducing GHG emissions. CCSD is a disadvanataged community and will be invoved in the design and implentation of the project.

NORTH COAST RESOURCE PARTNERSHIP

CERTIFICATION OF AUTHORITY

By signing below, the Authorized Representative executing the certificate on behalf of the Project Sponsor affirmatively represents that s/he has the requisite legal authority to do so on behalf of the Project Sponsor. The Authorized Representative executing this proposal on behalf of the project sponsor understands that the NCRP is relying on this representation in receiving and considering this proposal. The person signing below hereby acknowledges that s/he has read the entire NCRP 2022 Project Review and Selection Process Guidelines and the NCRP 2022 Proposition 1 IRWM Round 2 Project Application & Instructions documents and has complied with all requirements listed therein.

Official Authorized to Sign for Proposal

Signature

11-4-22

Date

Table of Contents

EXHIBIT A:
PROJECT AREAS

CCSD Project Areas

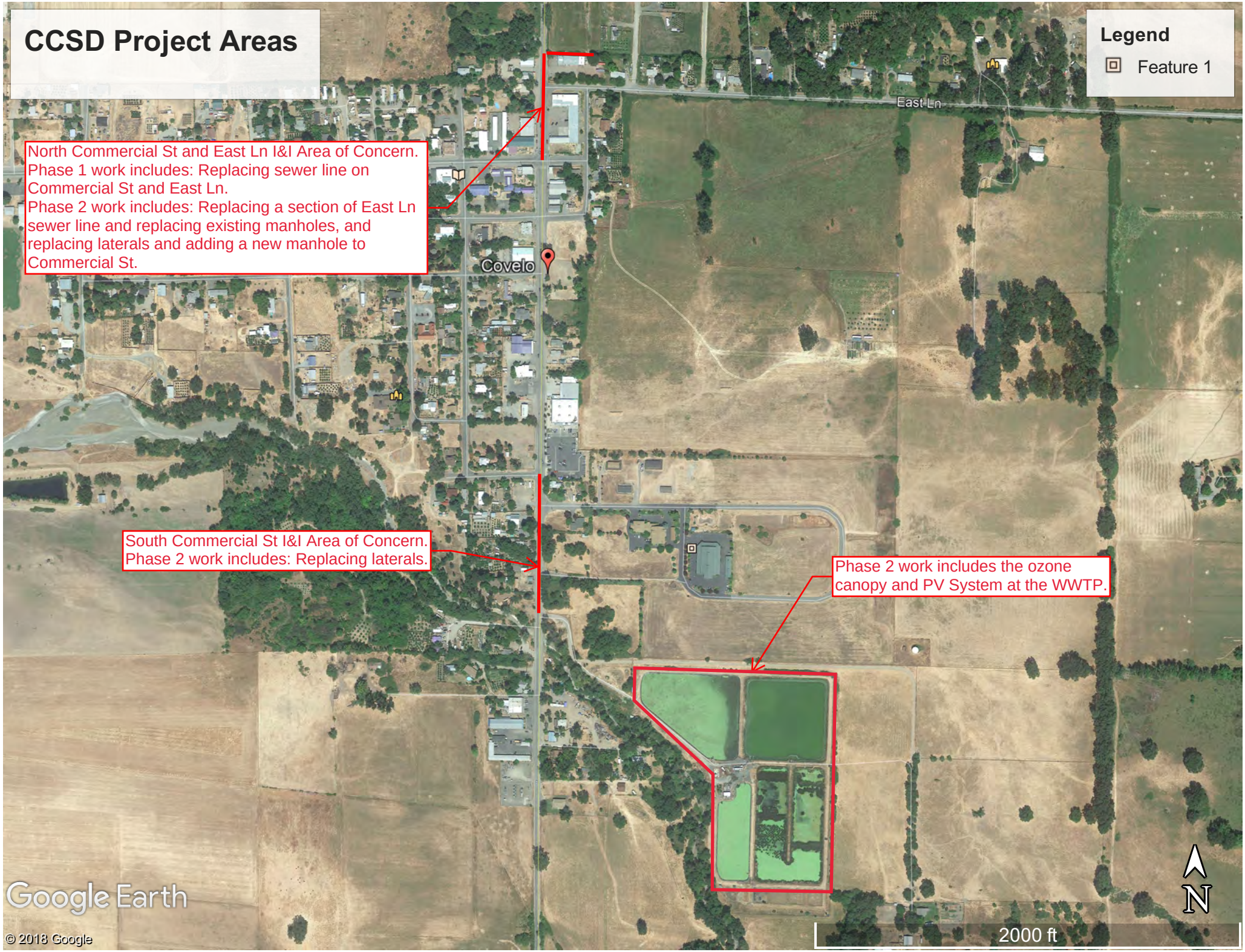

EXHIBIT B:
Final Design Plans for Phase 1 and Phase 2 Work

COVELO COMMUNITY SERVICES DISTRICT
COLLECTION SYSTEM & WWTP IMPROVEMENTS

JULY 2022

AREA MAP

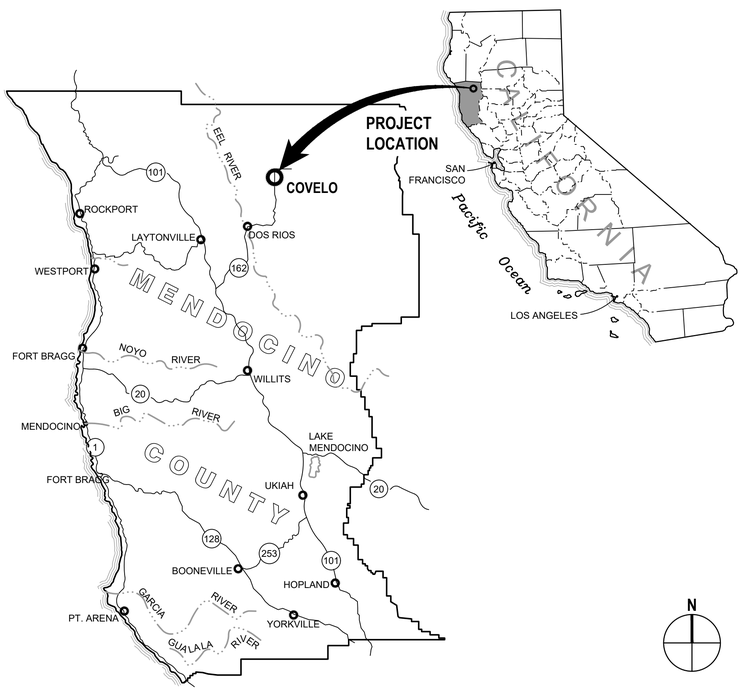

LOCATION MAP

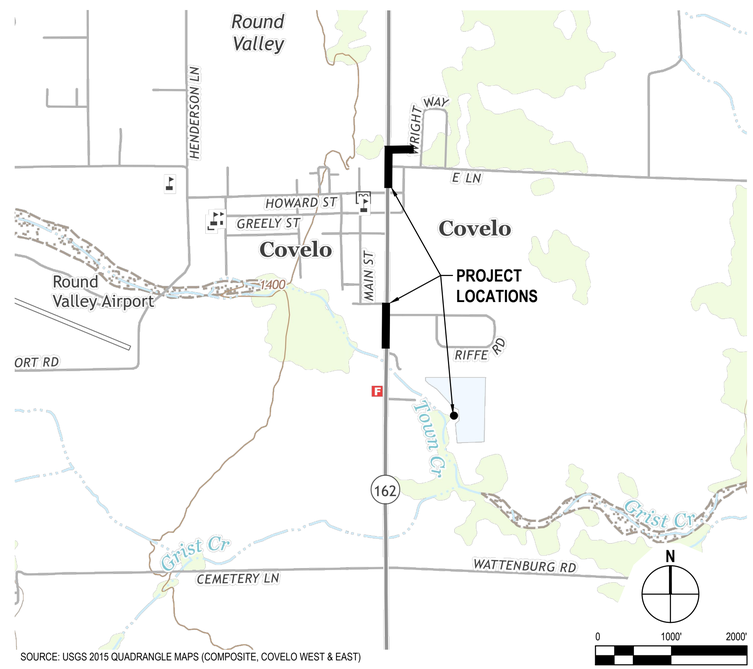

SOURCE: USGS 2015 QUADRANGLE MAPS (COMPOSITE, COVELO WEST & EAST)

APPROVALS

COVELO COMMUNITY SERVICES DISTRICT
DANE DOWNING, GENERAL MANAGER

SIGNED — DATE 7/28/2022

ENGINEER: GHD INC.
LUKE HALONEN, PE

SIGNED — DATE 7/20/2022

SHEET INDEX

No.	Issue	Drawn	Approved	Date

Bar is one inch on original size sheet
0 — 1"

REGISTERED PROFESSIONAL ENGINEER — LUKE D. HALONEN — No. C28980 — CIVIL — STATE OF CALIFORNIA
7/20/2022

GHD Inc.
718 Third Street
Eureka California 95501 USA
T 1 707 443 8326 F 1 707 444 8330 W www.ghd.com

Drawn	R. RIOS	Designer	R. RIOS
Drafting Check	L. HALONEN	Design Check	L. HALONEN
Project Manager	L. HALONEN	Date	7/20/2022
This document shall not be used for construction unless signed and sealed for construction.		Scale	AS SHOWN

Client: COVELO COMMUNITY SERVICES DISTRICT
Project: COLLECTION SYSTEM & WWTP IMPROVEMENTS
Title: COVER SHEET
Project No. 11216372
Original Size: ANSI D
Sheet No. G-001
Sheet 1 of 14

ABBREVIATIONS

A B	ANCHOR BOLT
AB	AGGREFATE BASE
AC	ASPHALT CONCRETE
AGG	AGGREGATE
ARV	AIR VACUUM RELEASE VALVE
AVE	AVENUE
AWWA	AMERICAN WATER WORKS ASSOCIATION
B-	BORING
BC	BEGIN CURVE
BF	BLIND FLANGE
BFP	BACK FLOW PREVENTER
BM	BENCH MARK
BLDG	BUILDING
BLVD	BOULEVARD
BO	BLOW OFF
BOT	BOTTOM
BVC	BEGIN VERTICAL CURVE
C	CONDUIT
CB	CATCH BASIN
CBC	CALIFORNIA BUILDING CODE
CI	CAST IRON
CL	CENTERLINE
CLR	CLEAR, CLEARANCE
CO	CLEAN OUT
CMP	CORRUGATED METAL PIPE
CMU	CONCRETE MASONRY UNIT
CONC	CONCRETE
CONT	CONTINUOUS
CONT'D	CONTINUED
COR	CORNER
CU	CUBIC
CV	CHECK VALVE
d	PENNY (NAIL SIZE)
DIA, Ø	DIAMETER
DTL	DETAIL
DI	DROP (DRAINAGE) INLET, OR DUCTILE IRON
DF	DOUGLAS FIR
DR	DRIVE
DW	DOMESTIC WATER LINE
DWG	DRAWING
(E)	EXISTING
E	EAST, OR EASTING
EA	EACH
EC	END CURVE
EF	EACH FACE
EP	EDGE PAVEMENT
EQ	EQUAL
ER	EDGE ROAD
EL/ELEV	ELEVATION
ELEC	ELECTRIC, OR ELECTRICAL
ENGR	ENGINEER
EVC	END VERTICAL CURVE
EW	EACH WAY
(F)	FUTURE
FDC	FIRE DEPARTMENT CONNECTION
FIN	FINISH
FF	FINISH FLOOR
FG	FINISH GRADE
FH	FIRE HYDRANT
FL	FLOW LINE
FLG	FLANGE
FLR	FLOOR
FM	FORCE MAIN
FO	FIBER OPTIC
FP	FIRE PROTECTION
FS	FINISHED SURFACE
FT	FOOT, OR FEET
FTG	FOOTING
G	GAS LINE
GAL	GALLON
GALV	GALVANIZED
GR	GRADE
GRD	GROUND
GV	GATE VALVE
HB	HOSE BIBB
HCSB	HUMBOLDT COMMUNITY SERVICES DISTRICT
HDD	HORIZONTAL DIRECTIONAL DRILLING
HDPE	HIGH-DENSITY POLYETHYLENE
HORZ	HORIZONTAL
HPG	HIGH PRESSURE GAS
HPNS	HIGH PRESSURE NATURAL GAS
HPS	HIGH PRESSURE SODIUM
HWY	HIGHWAY
IE	INVERT ELEVATION
INV	INVERT
IP	IRON PIPE
IRR	IRRIGATION
JCT	JUNCTION
JP	JUNCTION POLE (UTILITY)
L	LENGTH
LAT	LATERAL
LF	LINEAR FEET
LS	LIFT STATION
LT	LEFT
M	METER
MAX	MAXIMUM
MFR	MANUFACTURER
MG	MILLION GALLON
MH	MANHOLE
MIN	MINIMUM
MJ	MECHANICAL JOINT
MPG	MEDIUM PRESSURE GAS
MISC	MISCELLANEOUS
(N)	NEW
N	NORTH
NIC	NOT IN CONTRACT
NO	NUMBER
NTS	NOT TO SCALE
OC	ON CENTERS
OPNG	OPENING
PC	POINT OF CURVATURE
PCC	PORTLAND CONCRETE CEMENT
PE	POLYETHYLENE
PI	POINT OF INTERSECTION
PL	PLATE, OR PROPERTY LINE
PLCS	PLACES
PLWD	PLYWOOD
POC	POINT OF CONNECTION
PP	POWER POLE
PRV	PRESSURE REDUCING VALVE
PSI	POUNDS PER SQUARE INCH
PT	POINT, POINT OF TANGENCY, OR PRESSURE TREATED
PVC	POLYVINYL CHLORIDE PLASTIC PIPE
R	RADIUS
RC	RELATIVE COMPACTION
RCP	REINFORCED CONCRETE PIPE
RD	ROAD
RDWD	REDWOOD
REQ'D	REQUIRED
REQ'T	REQUIREMENT
RPP	REDUCED PRESSURE PRINCIPAL
RT	RIGHT
R/W	RIGHT OF WAY
S	SLOPE
SAT	SATURATED
SCH, OR	
SCHED	SCHEDULE
SD	STORM DRAIN
SDMH	STORM DRAIN MANHOLE
SDCB	STORM DRAIN CATCH BASIN
SHT	SHEET
SIM	SIMILAR
SO	SOUTH
SS	SANITARY SEWER
SSCO	SANITARY SEWER CLEAN OUT
SSMH	SANITARY SEWER MANHOLE
SSTL	STAINLESS STEEL
STA	STATION
STD	STANDARD
STL	STEEL
TC	TOP OF CURB
T, OR	
TEL	TELEPHONE
THK	THICK
TG	TOP OF GRATE
TP	TEST PIT, SEE GEOTECHNICAL DOCUMENTATION
TS	TOP OF SLAB
TW	TOP OF WALL
TYP	TYPICAL
UBC	UNIFORM BUILDING CODE
UNO	UNLESS NOTED OTHERWISE
UP	UTILITY POLE
V	VOLT(S)
VERT	VERTICAL
W/	WITH
W	WATER
WD	WIDE
WWTP	WASTEWATER TREATMENT PLANT
XING	CROSSING
YD	YARD
&	AND
@	AT
°	DEGREE
Ø	DIAMETER
'	FEET
"	INCHES
#	NUMBER
±	PLUS OR MINUS

NOTE:
CONTACT ENGINEER FOR ABBREVIATIONS NOT LISTED.

PLAN SYMBOLS

	6" CURB & GUTTER
	EDGE OF AC PAVEMENT
	6" VERTICAL CURB
OH	OVERHEAD WIRES
OHE	OVERHEAD ELECTRIC WIRES
OHT	OVERHEAD TELEPHONE WIRES
UGE	UNDERGROUND ELECTRIC LINE
E	ELECTRIC LINE
SL	STREET LIGHT CONDUIT
G	GAS LINE
SS	SANITARY SEWER LINE
SSFM	SANITARY SEWER FORCE MAIN
SD	STORM DRAIN LINE
SWS	SEAWATER SUPPLY
SWR	SEAWATER RETURN
T	TELEPHONE LINE
TC	TELECOMMUNICATIONS
L	LIGHTING CONDUIT
TV	TELEVISION LINE
W	WATER LINE
FW	FIRE WATER MAIN
IRR	IRRIGATION LINE
	TRENCH DRAIN
x x	CHAIN LINK FENCE
> >	FLOW LINE
V V	TOP OF BANK
89	CONTOUR ELEVATION LINE
– –	CENTER LINE
– – –	EXISTING PROPERTY LINE
· · — · ·	MONUMENT LINE
	EXISTING EASEMENT LINE
TC 24.52	FINISH GRADE
2.0%	SURFACE DRAINAGE SLOPE
x 95.94	SPOT ELEVATION
IRR	IRRIGATION BOX
GM	GAS METER
GV	GAS VALVE
WM	WATER METER
WV	WATER VALVE
WV	WATER VALVE
	FIRE HYDRANT
	FIRE DEPARTMENT CONNECTION
	WATER TAPPING SADDLE
	SANITARY SEWER MANHOLE
S	SEWER MANHOLE
SSCO	SANITARY SEWER CLEANOUT
SLP	SEWER LAMP HOLE
SV	SEWER VENT
SD	STORM DRAIN MANHOLE
CB	CATCH BASIN
	CURB INLET
DI	DRAINAGE INLET
SDCO	STORM DRAIN CLEANOUT
RWL	RAIN WATER LEADER
E	ELECTRIC VAULT COVER
E	ELECTRIC PULLBOX
TV	TELEVISION PULLBOX
T	TELEPHONE PULLBOX
HVE	HIGH VOLTAGE ELECTRIC
	UNDERGROUND ELECTRIC VAULT
T	TELEPHONE MANHOLE
	POWER POLE
GUY	GUY WIRE & ANCHOR
(2)R	JOINT POLE WITH (2) RISERS
JP	JOINT POLE
	STREET LIGHT
	ELECTROLIER
	PEDESTRIAN LIGHT
	PEDESTRIAN PUSH BUTTON
SL	STREET LIGHT PULLBOX
	SIGN (AS NOTED)

GENERAL SHEET SYMBOLS

1 KEYNOTE

1 DEMOLITION NOTE

DETAIL OR SECTION NUMBER

1 C-501 **TITLE**

SCALE

SHEET ON WHICH DETAIL OR SECTION APPEARS

DETAIL NUMBER

1 C-501 DETAIL INDICATOR

SHEET ON WHICH DETAIL APPEARS

SECTION NUMBER

A C-501 SECTION INDICATOR

SHEET ON WHICH SECTION APPEARS

No.	Issue	Drawn	Approved	Date

Bar is one inch on original size sheet
0 1"

REGISTERED PROFESSIONAL ENGINEER LUKE D. HALONEN No. C 69307 CIVIL STATE OF CALIFORNIA
7/20/2022

GHD Inc.
718 Third Street
Eureka California 95501 USA
T 1 707 443 8326 F 1 707 444 8330 W www.ghd.com

Drawn	R. RIOS	Designer	R. RIOS
Drafting Check	L. HALONEN	Design Check	L. HALONEN
Project Manager	L. HALONEN	Date	7/20/2022
This document shall not be used for construction unless signed and sealed for construction.		Scale	AS SHOWN

Client **COVELO COMMUNITY SERVICES DISTRICT**
Project **COLLECTION SYSTEM & WWTP IMPROVEMENTS**
Title **ABBREVIATIONS AND SYMBOLS**
Project No. **11216372**
Original Size **ANSI D**
Sheet No. **G-002**
Sheet **2** of **14**

GENERAL NOTES

1. PROJECT REQUIRES A CLASS A GENERAL ENGINEERING CONTRACTOR'S LICENSE IN THE STATE OF CALIFORNIA.
2. CONTRACTOR SHALL FIELD VERIFY ALL EXISTING SITE CONDITIONS PRIOR TO THE COMMENCEMENT OF WORK AND REPORT ANY DISCREPANCIES TO THE ENGINEER. CONTRACTOR IS RESPONSIBLE FOR VISITING THE SITE AND BECOMING FAMILIAR WITH THE SITE CONDITIONS PRIOR TO BIDDING.
3. IT IS EXPECTED THAT THE ACTUAL LOCATION OF EXISTING UTILITIES MAY VARY FROM THAT SHOWN ON THE PLANS. CONTRACTOR SHALL POTHOLE AND LOCATE ALL EXISTING UTILITIES. VARIATIONS IN LOCATION AND DEPTH SHALL BE BROUGHT TO THE ATTENTION OF THE OWNER IMMEDIATELY SO THAT THE LOCATION OF UTILITIES MAY BE CHECKED WITH THE PROPOSED DESIGN. CONTRACTOR SHALL NOTIFY UNDERGROUND SERVICE ALERT PRIOR TO WORK COMMENCING FOR ANY EXCAVATION OR POTHOLING.
4. CONTRACTOR IS RESPONSIBLE FOR CONFIRMING THAT NEW FEATURES TIE INTO EXISTING SITE DEVELOPMENT, PIPE JOINTS MATCH CORRECTLY, AND THAT GENERAL DESIGN ELEVATIONS FOR NEW CONSTRUCTION PROVIDE PROPER DRAINAGE SLOPES FROM EXISTING TIE IN POINTS. REPORT DISCREPANCIES TO ENGINEER PRIOR TO CONSTRUCTION.
5. THE DESIGN FEATURES INCLUDING HORIZONTAL AND VERTICAL ALIGNMENTS, TYPICAL SECTIONS, APPROACHES, AND OTHER DESIGN DETAILS SHOWN ON THESE DESIGN PLANS SHALL NOT BE ALTERED OR MODIFIED IN ANY WAY DURING CONSTRUCTION WITHOUT THE EXPRESSED, WRITTEN DIRECTION AND APPROVAL OF THE ENGINEER.
6. UPON COMPLETION OF THE CONSTRUCTION PROJECT, THE CONTRACTOR SHALL LEAVE THE PROJECT AREA AND THE EXISTING ACCESS ROAD FREE OF DEBRIS AND UNUSED MATERIAL. ALL DAMAGE CAUSED BY THE CONTRACTOR SHALL BE RESTORED TO AN "AS GOOD OR BETTER" CONDITION.
7. CONTRACTOR TO MAINTAIN TRAFFIC (VEHICULAR AND PEDESTRIAN) ACCESS TO ALL AREAS OF PUBLIC RIGHT-OF-WAY AT ALL TIMES. CONTRACTOR TO COORDINATE ANY PROPOSED SHUT DOWNS WITH OWNER.
8. CONTRACTOR SHALL CONTACT THE ENGINEER AND OWNER TO COORDINATE WITH THE OWNER'S REPRESENTATIVE TO HAVE THE OPPORTUNITY TO BE PRESENT DURING ANY GROUND DISTURBING ACTIVITIES.
9. IN THE EVENT CULTURAL RESOURCES (I.E., HISTORICAL, ARCHAEOLOGICAL, AND PALEONTOLOGICAL RESOURCES, AND HUMAN REMAINS) ARE DISCOVERED DURING GRADING OR OTHER CONSTRUCTION ACTIVITIES, WORK SHALL BE HALTED WITHIN A 100 FOOT RADIUS OF THE FIND. A QUALIFIED ARCHEOLOGIST SHALL BE CONSULTED FOR AN ON-SITE EVALUATION. ADDITIONAL MITIGATION MAY BE REQUIRED BY THE COUNTY PER THE ARCHEOLOGIST'S RECOMMENDATIONS. IF HUMAN BURIALS OR HUMAN REMAINS ARE ENCOUNTERED, THE CONTRACTOR SHALL ALSO NOTIFY THE COUNTY CORONER.
10. MATERIAL NOT SUITABLE FOR REUSE SHALL BE REMOVED FROM SITE AND DISPOSED OF IN A MANNER CONSISTENT WITH APPLICABLE REGULATIONS. THE CONTRACTOR SHALL ASSUME FULL RESPONSIBILITY AND EXPENSE FOR LEGAL DISPOSAL OF ALL MATERIALS TAKEN FROM SITE.
11. CONTRACTOR SHALL NOTIFY THE ENGINEER AND OWNER TWO (2) WEEKS PRIOR TO ANY CONSTRUCTION ACTIVITIES SO THAT THE OWNER-SUPPLIED BIOLOGICAL MONITOR CAN SURVEY THE AREA FOR MIGRATORY NESTING BIRDS.

GRADING NOTES

1. THE CONTRACTOR IS RESPONSIBLE FOR FIELD VERIFICATION OF ALL TOPOGRAPHIC DATA. CONTRACTOR IS RESPONSIBLE FOR ESTABLISHING RIGHT- OF-WAY LINES, SLOPE EASEMENTS, AND ALL HORIZONTAL AND VERTICAL CONTROL PRIOR TO CONSTRUCTION.
2. CONTRACTOR IS RESPONSIBLE FOR CONSTRUCTION STAKING AND SHALL ARRANGE FOR STAKING WITH A LICENSED SURVEYOR. STAKING WILL BE REVIEWED BY OWNER FOR CONFIRMATION TO DESIGN PRIOR TO CONSTRUCTION. THE NATURE AND EXTENT OF STAKING SHALL BE AS PER CONTRACTOR'S MEANS AND METHODS.
3. ALL GRADES BETWEEN SPOT ELEVATIONS SHALL HAVE UNIFORM SLOPE UNLESS OTHERWISE INDICATED. MAINTAIN POSITIVE DRAINAGE AWAY FROM ALL BUILDING WALLS AND DOORS.
4. CONTRACTOR SHALL BE RESPONSIBLE FOR THE SAFETY OF ALL CONSTRUCTION. ADEQUATE SHORING BRACING, TIES, AND SUPPORTS SHALL BE USED TO PROVIDE PROPER TEMPORARY INTEGRITY DURING ALL PHASES OF CONSTRUCTION.
5. ALL EXISTING LANDSCAPED AND UNPAVED AREAS WHICH ARE DISTURBED BY CONSTRUCTION OR EARTHWORK OPERATIONS SHALL BE HAND RAKED SMOOTH, DEBRIS REMOVED, RESEEDED AND RETURNED TO ORIGINAL EXISTING CONDITIONS.
6. ALL DITCHES, SWALES, GUTTERS, ETC. SHOULD BE CONSIDERED ACTIVE STORM CONVEYANCES UNLESS OTHERWISE INDICATED. CONTRACTOR IS RESPONSIBLE FOR ADDRESSING STORM WATER DRAINAGE AND DEWATERING OF WORK AREAS DURING CONSTRUCTION.
7. DURING WET WEATHER PERIODS, CONTRACTOR IS RESPONSIBLE FOR SEQUENCING CONSTRUCTION IN A MANNER TO MINIMIZE IMPACT ON OPEN EARTHWORK AND COMPACTION OPERATIONS.
8. COMPLETELY COVER ANY SOIL STOCKPILES WITH 6 MIL BLACK PLASTIC AND PROVIDE RESTRAINTS TO HOLD PLASTIC IN PLACE. MONITOR PLASTIC COVER AS PART OF CONTINUOUS EROSION CONTROL PLAN. PLACE SILT FENCE COMPLETELY AROUND STOCKPILE.

SURVEY NOTES

1. TOPOGRAPHIC BACKGROUND NOT A PRODUCT OF SURVEY, UNO.
2. EXISTING UTILITY DATA FROM COVELO CSD 1961 AND 2008 RECORD DRAWINGS. ELEVATION DATA FROM 1961 RECORD DRAWINGS ADJUSTED FOR 2008 RECORD DRAWINGS VERTICAL DATUM. ALL ELEVATIONS AND STATIONS ARE APPROXIMATE. CONTRACTOR RESPONSIBLE FOR FIELD VERIFYING ALL ELEVATIONS AND STATIONS.

UTILITY NOTES

1. LOCATIONS OF EXISTING UNDERGROUND UTILITIES ARE PLOTTED FROM INFORMATION AVAILABLE AND INTERPOLATION OF PHYSICAL EVIDENCE ON THE SITE AND ARE SUBJECT TO FIELD VERIFICATION BY THE CONTRACTOR. SEE GENERAL SITE NOTES 1 AND 2.
2. ALL LOCATIONS FOR WORK SHALL BE CHECKED AND COORDINATED WITH EXISTING CONDITIONS IN THE FIELD BEFORE BEGINNING CONSTRUCTION.
3. THE DRAWINGS ARE GENERALLY DIAGRAMMATIC. THEY DO NOT SHOW EVERY OFFSET, BEND OR ELBOW REQUIRED FOR INSTALLATION IN THE SPACE PROVIDED. THEY DO NOT SHOW EVERY DIMENSION, COMPONENT PIECE, OR FITTING REQUIRED TO COMPLETE THE PROJECT. CONTRACTOR IS RESPONSIBLE FOR PROVIDING A COMPLETE AND WORKING SYSTEM.
4. CONTRACTOR SHALL COORDINATE A UTILITY LOCATE 72 HOURS PRIOR TO BEGINNING ANY UTILITY CONSTRUCTION FOR LOCATION MARK-UP OF ALL EXISTING UTILITIES. CONTRACTOR SHALL COORDINATE THE UTILITY LOCATE WITH COVELO COMMUNITY SERVICES DISTRICT FOR ALL UTILITY WORK. INFORM OWNER IMMEDIATELY IF LOCATE INDICATES THAT EXISTING UTILITIES ARE DIFFERENT THAN SHOWN ON DRAWINGS.
5. CONTRACTOR IS RESPONSIBLE FOR POTHOLING ALONG THE ALIGNMENTS OF ALL NEW UTILITIES TO IDENTIFY POTENTIAL UTILITY CONFLICTS, SOILS CONDITIONS, AND TIE-IN POINTS. CONTRACTOR RESPONSIBLE FOR MAKING ADJUSTMENTS IN ALIGNMENTS TO ACCOMMODATE ACTUAL FIELD CONDITIONS.
6. CONTRACTOR IS RESPONSIBLE FOR ANY DAMAGE TO UTILITIES, FEATURES, AND STRUCTURES LOCATED ON THE SITE. LOCATE, PROTECT, AND AVOID DISRUPTION OF ALL ABOVE AND BELOW GRADE UTILITIES DURING CONSTRUCTION.
7. ALL UTILITY CONSTRUCTION SHALL CONFORM TO THE LATEST EDITION OF THE CALIFORNIA PLUMBING CODE (CPC).
8. ALL BURIED LINES TO HAVE 30 INCHES MINIMUM COVER, UNLESS NOTED OTHERWISE. SEE TRENCH DETAIL SHEET C-501.
9. THRUST BLOCKING REQUIRED ON ALL PRESSURE LINES BENDS AND FITTINGS. SEE STANDARD THRUST BLOCKING DETAIL.
10. ALL EXISTING UTILITIES AND TIE-IN POINTS SHOULD BE CONSIDERED ACTIVE UTILITIES UNLESS OTHERWISE INDICATED.
11. CONFIRM ALL UTILITY VALVE VAULTS, VALVES, METERS, BACKFLOW PREVENTION ASSEMBLIES, AND OTHER PUBLIC UTILITY APPURTENANCES IN THE RIGHT-OF-WAY WITH THE UTILITY OWNERS.
12. PROVIDE POLYETHYLENE ENCASEMENT FOR ALL BURIED DUCTILE IRON PIPE PER AWWA C105.
13. ALL BOLTS USED FOR UNDERGROUND CONNECTIONS SHALL BE STAINLESS STEEL. ALL CORROSION PROTECTION SHALL BE IN PLACE. ALL BOLTED JOINT ACCESSORIES SHALL BE CLEANED AND THOROUGHLY COATED WITH ASPHALT OR OTHER CORROSION-RETARDING MATERIAL AFTER INSTALLATION.
14. CONTRACTOR TO VERIFY SIZE, TYPE, AND LOCATION OF ALL INTERCONNECTIONS AND PROVIDE COUPLERS AND TRANSITION FITTINGS AS NECESSARY.
15. CONTRACTOR MAY PROPOSE ALTERNATIVE FITTING TYPES AND CONFIGURATIONS.
16. CONTRACTOR SHALL MAINTAIN UTILITY MINIMUM WATER AND SEWER HORIZONTAL AND VERTICAL SEPARATIONS AS REQUIRED BY CALIFORNIA CODE OF REGULATIONS, TITLE 22, SECTION 64572, WATER MAIN SEPARATION.

HAZARDOUS MATERIAL NOTES

1. CONTRACTOR TO PROPERLY HANDLE AND DISPOSE OF HAZARDOUS MATERIALS
2. EXISTING FOUND HAZARDOUS MATERIALS FOUND ON SITE INCLUDES BUT IS NOT LIMITED TO ASBESTOS MATERIALS AND PIPING

VEGETATION PROTECTION AND RESTORATION NOTES

1. NO CUTTING OF ANY PART OF TREES, INCLUDING ROOTS, SHALL BE DONE OUTSIDE LIMITS OF DISTURBANCE WITHOUT SECURING APPROVAL FROM ENGINEER AND OWNER.
2. DISPOSAL OF TREES SHALL NOT INCLUDE SALE, BARTER, TRADE, OR EXCHANGE BY THE DISTRICT, THE DISTRICT'S CONTRACTOR, OR ANY SUCCESSORS. THE CONTRACTOR SHALL REMOVE AND DISPOSE OF THE MINIMUM AMOUNT OF TREES REQUIRED TO CONSTRUCT THE PROJECT.
3. WHEN CONSTRUCTION OCCURS WITHIN DRIP LINE ON EXISTING TREES, CONTRACTOR IS TO PILE THE SOIL ON THE SIDE AWAY FROM THE TREE. WHEN THIS IS NOT POSSIBLE, PLACE SOIL ON PLYWOOD. A TARP, OR THICK BED OF MULCH. THIS IS TO HELP PREVENT CUTTING INTO THE SOIL SURFACE WHEN THE BACKHOE OR TRACTOR BLADE REFILLS THE TRENCH.
4. REFILL OPEN TRENCHES QUICKLY WITHIN HOURS OF EXCAVATION WHEN THEY OCCUR WITHIN THE DRIP LINE OF EXISTING TREES. IF THIS IS NOT POSSIBLE AND WEATHER IS HOT, DRY, OR WINDY, CONTRACTOR MUST KEEP ROOT ENDS MOIST BY COVERING THEM WITH WET BURLAP. IF TEMPERATURE IS 80°F OR GREATER, THE BURLAP MUST BE INSPECTED EVERY HOUR AND RE-WET A NECESSARY TO MAINTAIN A CONSTANT COOL MOIST CONDITION. IF TEMPERATURE IS BELOW 80°, THE BURLAP MUST BE INSPECTED EVERY FOUR HOURS AND RE-WET AS NECESSARY TO MAINTAIN A CONSTANT COOL MOIST CONDITION. SMALL ROOTS CAN DRY OUT AND DIE IN 10-15 MINUTES. LARGER ROOTS CAN SUCCUMB IN AN HOUR OR LESS UNDER UNFAVORABLE WEATHER CONDITIONS.
5. WHEN ROOTS 2" OR LARGER MUST BE CUT, SHOVEL BY HAND NEAR THE ROOTS AND SAW THE ROOTS. ACCIDENTALLY BROKEN ROOTS SHOULD BE SAWED A COUPLE OF INCHES BEHIND THE RAGGED END. CRUSHED OR TORN ROOTS ARE MORE LIKELY TO ALLOW DECAY TO BEGIN; SHARPLY CUT ROOTS PRODUCE A FLUSH OF NEW ROOTS HELPING THE TREE TO RECOVER FROM ITS INJURY.
6. MATERIALS, EQUIPMENT, TEMPORARY BUILDINGS, FUELS, PAINTS AND OTHER CONSTRUCTION ITEMS ARE NOT TO BE PLACED WITHIN THE DRIP LINE OF EXISTING TREES.
7. GRADING SHOULD NOT CREATE DRAINAGE PROBLEMS FOR TREES BY CHANNELING WATER INTO THEM, OR CREATING SUNKEN AREAS.
8. LANDSCAPING THAT IS REMOVED TO FACILITATE CONSTRUCTION SHALL BE REPLACED IN KIND.

EROSION CONTROL NOTES

1. AT A MINIMUM, THE CONTRACTOR SHALL EMPLOY THE FOLLOWING BEST MANAGEMENT PRACTICES (BMPS) AS DESCRIBED IN THE CURRENT CALIFORNIA STORMWATER BMP HANDBOOK FOR CONSTRUCTION (WWW.CASQA.ORG):

EC-1	SCHEDULING	NS-9	VEHICLE EQUIPMENT AND FUELING
EC-2	PRESERVATION OF EXISTING VEGETATION	NS-10	VEHICLE & EQUIPMENT MAINTENANCE
EC-4	HYDROSEEDING	WM-1	MATERIALS DELIVERY AND STORAGE
SE-1	SILT FENCE	WM-2	MATERIAL USE
SE-5	FIBER ROLLS	WM-3	STOCKPILE MANAGEMENT
SE-7	STREET SWEEPING AND VACUUMING	WM-4	SPILL PREVENTION AND CONTROL
SE-10	STORM DRAIN INLET PROTECTION	WM-5	SOLID WASTE MANAGEMENT
WE-1	WIND EROSION CONTROL	WM-8	CONCRETE WASTE MANAGEMENT
NS-3	PAVING AND GRINDING OPERATIONS	WM-9	SANITARY/SEPTIC WASTE MANAGEMENT

2. IT IS THE RESPONSIBILITY OF THE CONTRACTOR TO MINIMIZE EROSION AND PREVENT THE TRANSPORT OF SEDIMENT TO SENSITIVE AREAS.
3. SUFFICIENT EROSION CONTROL SUPPLIES SHALL BE AVAILABLE ON-SITE AT ALL TIMES TO DEAL WITH AREAS SUSCEPTIBLE TO EROSION DURING RAIN EVENTS.
4. MINIMIZE DISTURBANCE OF EXISTING VEGETATION TO THAT NECESSARY TO COMPLETE THE WORK.
5. THE CONTRACTOR SHALL MAKE ADEQUATE PREPARATIONS, INCLUDING TRAINING & EQUIPMENT, TO CONTAIN SPILLS OF OIL AND OTHER HAZARDOUS MATERIALS.
6. ACTIVITIES SUCH AS VEHICLE WASHING ARE TO BE CARRIED OUT AT AN OFF-SITE FACILITY WHEREIN THE WATER IS DISCHARGED INTO A SANITARY SEWER.
7. THE CONTRACTOR SHALL PROVIDE COVERED WASTE RECEPTACLE FOR COMMON SOLID WASTES AT CONVENIENT LOCATIONS ON THE JOB SITE AND PROVIDE REGULAR COLLECTION OF WASTES.
8. THE CONTRACTOR SHALL PROVIDE SANITARY FACILITIES OF SUFFICIENT NUMBER AND SIZE TO ACCOMMODATE CONSTRUCTION CREWS AND ENSURE ADEQUATE ANCHORAGE OF SUCH FACILITIES TO PREVENT THEM FROM BEING TIPPED BY THE WEATHER OR VANDALISM.
9. APPROPRIATE STORAGE AND DISPOSAL OF WATER FROM DEWATERING OPERATIONS SHALL BE EXERCISED IN THE EVENT THAT ACCUMULATED WATER MUST BE REMOVED FROM A WORK LOCATION.
10. COVERED AND SECURED STORAGE AREAS FOR POTENTIALLY TOXIC MATERIALS SHALL BE PROVIDED. ALL HAZARDOUS MATERIAL CONTAINERS SHOULD BE PLACED IN SECONDARY CONTAINMENT.
11. VEHICLE AND EQUIPMENT & MAINTENANCE SHOULD BE PERFORMED OFF-SITE WHENEVER PRACTICAL.
12. SOIL STOCKPILES SHALL BE COVERED, AND LOCATED AT LEAST 50 FEET AWAY FROM DRAINAGE CHANNELS AND STORMWATER SYSTEMS.
13. CONTRACTOR MUST ENSURE THAT THE CONSTRUCTION SITE IS PREPARED PRIOR TO THE ONSET OF ANY STORM.
14. ALL SEDIMENT DEPOSITED ON PAVED SURFACES SHALL BE SWEPT AT THE END OF EACH WORKING DAY, AS NECESSARY OR AS DIRECTED BY THE OWNER'S REPRESENTATIVE. A STABILIZED CONSTRUCTION ENTRANCE MAY BE REQUIRED TO PREVENT SEDIMENT FROM BEING DEPOSITED ON PAVED ROADWAYS.
15. ALL EROSION AND SEDIMENT CONTROL MEASURES SHALL BE MAINTAINED IN ACCORDANCE TO THEIR RESPECTIVE BMP FACT SHEET UNTIL DISTURBED AREAS ARE STABILIZED.
16. THIS PLAN MAY NOT COVER ALL THE SITUATIONS THAT ARISE DURING CONSTRUCTION DUE TO UNANTICIPATED FIELD CONDITIONS. VARIATIONS MAY BE MADE TO THE PLAN IN THE FIELD SUBJECT TO THE APPROVAL OF OR AT THE DIRECTION OF THE ENGINEER.
17. IT WILL BE THE RESPONSIBILITY OF THE CONTRACTOR TO FIX ANY DEFICIENCIES INDICATED BY THE OWNER OR ENGINEER TO PREVENT EROSION AND CONTROL SEDIMENT.
18. PRIOR TO FINAL ACCEPTANCE ALL DISTURBED AREAS OF THE SITE SHALL BE PERMANENTLY STABILIZED WITH HYDROSEED BY CONTRACTOR AND TEMPORARY SEDIMENT CONTROL MEASURES SHALL BE REMOVED AS DIRECTED.

TRAFFIC CONTROL NOTES

1. THE CONTRACTOR SHALL PREPARE A DETAILED TRAFFIC CONTROL PLAN FOR ALL WORK AREAS, AND SHALL SUBMIT THE PLAN TO THE ENGINEER FOR APPROVAL AT THE PRECONSTRUCTION MEETING. THE TRAFFIC CONTROL PLAN SHALL COMPLY WITH ALL REQUIRED PERMITS (INCLUDING STATE AND COUNTY ENCROACHMENT PERMITS) AND OTHER GUIDELINES LISTED ON THESE PLANS AND IN THE SPECIFICATIONS.
2. THE CONTRACTOR SHALL KEEP ONE LANE OF TRAFFIC OPEN THROUGH THE WORK AREA AT ALL TIMES. NO LANE CLOSURES IN STATE HIGHWAY RIGHT-OF-WAY ARE ALLOWED.
3. THE CONTRACTOR SHALL COORDINATE WITH ALL PROPERTY OWNERS POTENTIALLY AFFECTED BY CONTRACTOR'S CONSTRUCTION PLANS. TRAFFIC CONTROL PLAN SHALL SHOW HOW ACCESS TO THE PROPERTIES WILL BE MAINTAINED THROUGHOUT THE PROJECT.
4. CONTRACTOR SHALL CONDUCT OPERATION AS TO OFFER THE LEAST POSSIBLE OBSTRUCTION AND INCONVENIENCE TO THE PUBLIC, AND SHALL HAVE UNDER CONSTRUCTION NO GREATER AMOUNT OF WORK THAN CAN PROSECUTE PROPERLY WITH DUE RESPECT TO THE RIGHTS OF THE PUBLIC. THE CONTRACTOR SHALL NOTIFY ALL AFFECTED PARTIES 72-HOURS PRIOR TO ANY AUTHORIZED LANE OR DRIVEWAY CLOSURES.
5. WORK SHALL BE ACCOMPLISHED IN SUCH A MANNER AS TO PROVIDE ACCESS TO ALL INTERSECTING STREETS AND ADJACENT PROPERTIES WHENEVER POSSIBLE. ACCESS TO PRIVATE PROPERTY SHALL BE MAINTAINED AT ALL TIMES TO THE EXTENT PRACTICABLE. ANY ACCESS RESTRICTIONS SHALL BE APPROVED IN ADVANCE BY THE ENGINEER. NO FULL ROAD CLOSURES WILL BE ALLOWED.
6. THE CONTRACTOR SHALL BE PREPARED TO REMOVE CLOSURES AND PROVIDE EMERGENCY VEHICLE ACCESS AT ALL TIMES. THE CONTRACTOR WILL NOT BE ENTITLED TO COMPENSATION FOR THE DELAYS OF WORK RESULTING FROM A CLOSURE NEEDING TO BE OPENED IN ORDER TO PROVIDE EMERGENCY VEHICLE ACCESS. ANY ACCESS RESTRICTIONS SHALL BE APPROVED IN ADVANCE BY THE ENGINEER.

No.	Issue	Drawn	Approved	Date

Bar is one inch on original size sheet
0 — 1"

REGISTERED PROFESSIONAL ENGINEER — LUKE D. HALONEN — No. C085851 — CIVIL — STATE OF CALIFORNIA
7/20/2022

GHD Inc.
718 Third Street
Eureka California 95501 USA
T 1 707 443 8326 F 1 707 444 8330 W www.ghd.com

Drawn	R. RIOS	Designer	R. RIOS
Drafting Check	L. HALONEN	Design Check	L. HALONEN
Project Manager	L. HALONEN	Date	7/20/2022
This document shall not be used for construction unless signed and sealed for construction.		Scale	AS SHOWN

Client: COVELO COMMUNITY SERVICES DISTRICT
Project: COLLECTION SYSTEM & WWTP IMPROVEMENTS
Title: GENERAL NOTES
Project No. 11216372
Original Size: ANSI D
Sheet No. G-003
Sheet 3 of 14

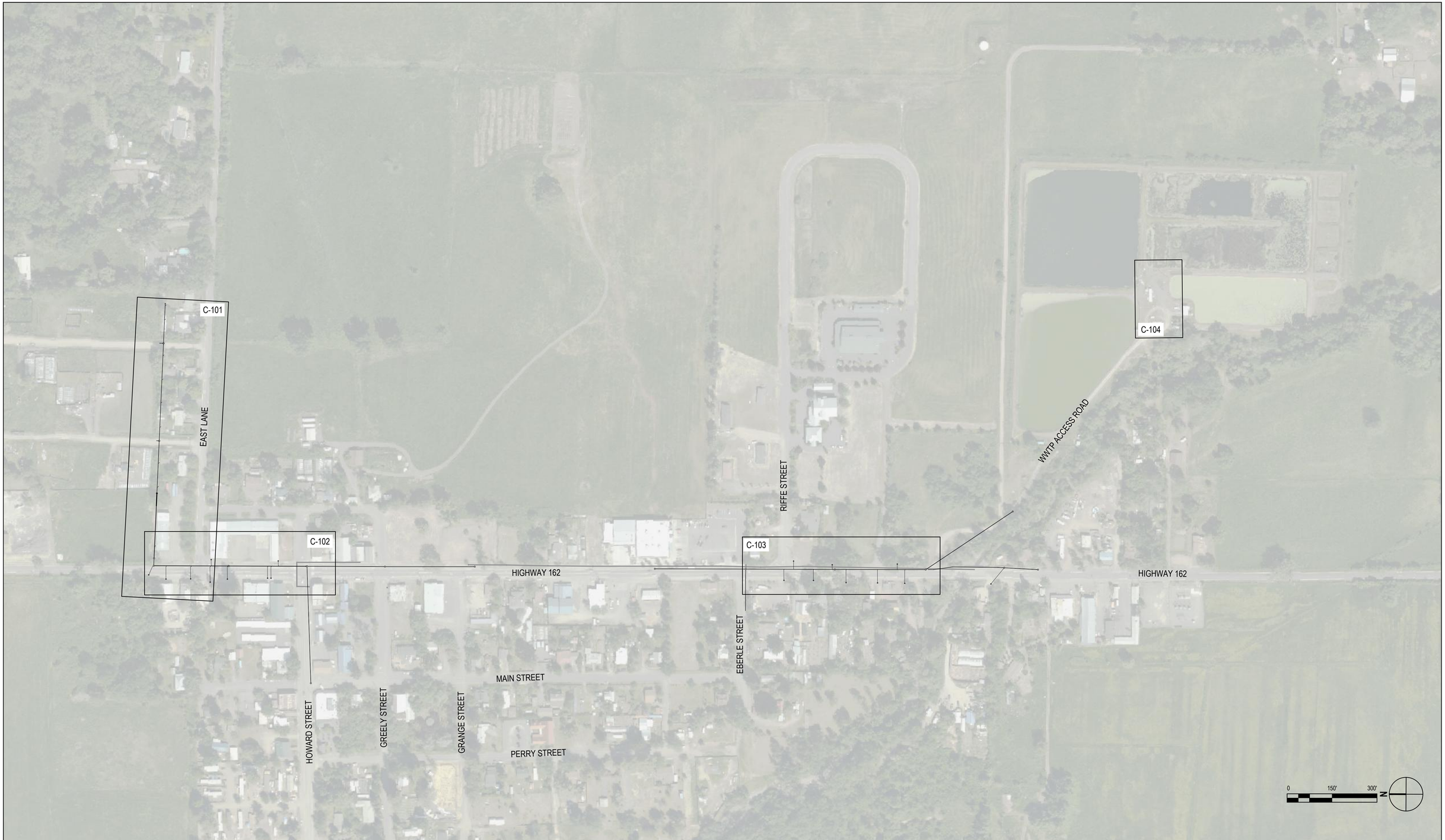

No.	Issue	Drawn	Approved	Date

Bar is one inch on original size sheet
0 1"

Reuse of Documents
This document and the ideas and designs incorporated herein, as an instrument of professional service, is the property of GHD and shall not be reused in whole or in part for any other project without GHD's written authorization.

REGISTERED PROFESSIONAL ENGINEER
LUKE D. HALONEN
No. C48931
CIVIL
STATE OF CALIFORNIA
7/20/2022

GHD Inc.
718 Third Street
Eureka California 95501 USA
T 1 707 443 8326 F 1 707 444 8330 W www.ghd.com

Drawn	R. RIOS	Designer	R. RIOS
Drafting Check	L. HALONEN	Design Check	L. HALONEN
Project Manager	L. HALONEN	Date	7/20/2022
This document shall not be used for construction unless signed and sealed for construction.		Scale	AS SHOWN

Client **COVELO COMMUNITY SERVICES DISTRICT**
Project **COLLECTION SYSTEM & WWTP IMPROVEMENTS**
Title **PROJECT OVERVIEW**
Project No. **11216372**
Original Size **ANSI D**
Sheet No. **G-004**
Sheet **4** of **14**

Plot Date: 20 July 2022 - 2:15 PM Plotted By: Luke Halonen Filename: \\ghdnet\ghd\US\Redding\Projects\561\11216372\digital_design\acad 2020\Sheets\11216372_G004.dwg

PLAN

0 20' 40' 80'

N

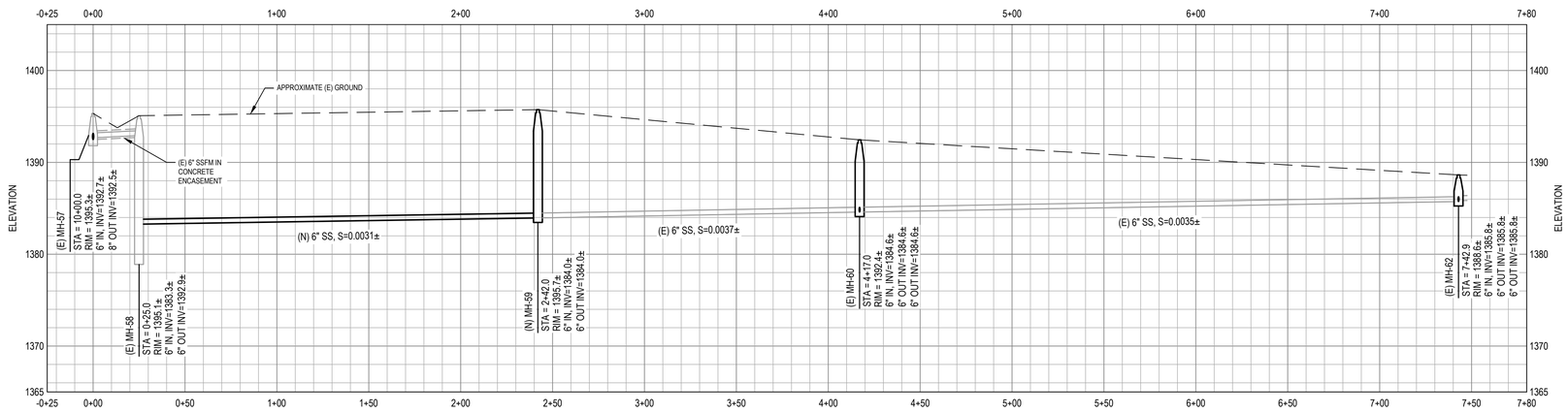

PROFILE

0 8' 16' VERTICAL
0 40' 80' HORIZONTAL

SHEET GENERAL NOTES

1. LOCATION OF EXISTING UTILITIES AND STRUCTURES ARE FROM INFORMATION AVAILABLE AT THE TIME OF DESIGN. EXACT LOCATION AND COMPLETENESS ARE NOT GUARANTEED. CONTRACTOR SHALL NOTIFY THE OWNER AND UNDERGROUND SERVICES ALERT (800) 227-2600 A MINIMUM OF 72 HOURS PRIOR TO ANY EXCAVATION AND SHALL POTHOLE FOR EXACT LOCATION. CONTRACTOR IS RESPONSIBLE FOR LOCATING EXISTING UTILITIES.
2. EXISTING AERIAL BACKGROUND AND BOUNDARIES ARE NOT A PRODUCT OF SURVEY. CONTRACTOR TO VERIFY ACTUAL SITE CONDITIONS PRIOR TO PERFORMING WORK.
3. EXISTING UTILITY DATA FROM COVELO CSD 1961 AND 2008 RECORD DRAWINGS. ELEVATION DATA FROM 1961 RECORD DRAWINGS ADJUSTED FOR 2008 RECORD DRAWINGS VERTICAL DATUM. ALL ELEVATIONS AND STATIONS ARE APPROXIMATE. EXISTING SEWER LATERALS AND CLEANOUTS ARE APPROXIMATE. CONTRACTOR RESPONSIBLE FOR FIELD VERIFYING ALL ELEVATIONS AND STATIONS.
4. EXISTING SEWER LATERALS MAY NOT HAVE CLEANOUTS.
5. PROVIDE ALL TRANSITION COUPLINGS AS NECESSARY.
6. CONTRACTOR TO RESTRIPE ROADWAY TO MATCH EXISTING AFTER FINAL PAVING.
7. PROPERTY BOUNDARIES FROM RAU AND ASSOCIATES INC. IN OCTOBER 2013.
8. UTILITY TRENCH WORK IN STATE ROAD R/W SHALL CONFORM TO CALTRANS TRENCH DETAIL TR-0153.
9. FINAL PAVING FOR THE SEWER MAIN IN THE STATE ROAD R/W SHALL INCLUDE THE ENTIRE SHOULDER WIDTH.
10. REPLACEMENT OF (E) SEWER MAINS AND LATERALS SHALL MATCH (E) ELEVATIONS AND SLOPES UNLESS NOTED OTHERWISE.

HAZARDOUS MATERIALS NOTES

1. EXISTING ASBESTOS MATERIALS EXPECTED ON SITE. CONTRACTOR TO PROPERLY HANDLE AND DISPOSE OF HAZARDOUS MATERIAL.

SHEET KEYNOTES

1. REPLACE (E) MANHOLE WITH (N) 48" MANHOLE. (2 / C-501)
2. REPLACE (E) 6" SS WITH (N) 6" PVC SS.
3. REPLACE (E) 6" ACP WITH (N) 8" PVC SS.
4. RECONNECT (E) SS LATERAL. (5 / C-501)
5. REPLACE (E) SS LATERAL WITH (N) 4" PVC SS LATERAL. (5 / C-501)
6. (N) 4" PVC SS LATERAL. PLUG UPSTREAM OF CLEANOUT FOR FUTURE CONNECTION. (1 / C-502)
7. (N) 48" MANHOLE. (2 / C-501)
8. REMOVE (E) SEWER CLEANOUT WHERE PRESENT ON (E) SEWER LATERAL. PROVIDE (N) SEWER CLEANOUT, FIELD LOCATE WITH OWNER. (4 / C-501)
9. (N) CLEANOUT. (4 / C-501)
10. ADDITIVE BID ITEM.

NOTE: SOME KEYNOTES NOT USED ON THIS SHEET.

No.	Issue	Drawn	Approved	Date

Bar is one inch on original size sheet
0 1"

REGISTERED PROFESSIONAL ENGINEER LUKE D. HALONEN No. C68690 CIVIL STATE OF CALIFORNIA
7/20/2022

GHD Inc.
718 Third Street
Eureka California 95501 USA
T 1 707 443 8326 F 1 707 444 8330 W www.ghd.com

Drawn	R. RIOS	Designer	R. RIOS
Drafting Check	L. HALONEN	Design Check	L. HALONEN
Project Manager	L. HALONEN	Date	7/20/2022
This document shall not be used for construction unless signed and sealed for construction.		Scale	AS SHOWN

Client: COVELO COMMUNITY SERVICES DISTRICT
Project: COLLECTION SYSTEM & WWTP IMPROVEMENTS
Title: SEWER PLAN AND PROFILE - EAST LANE
Project No. 11216372
Original Size: ANSI D
Sheet No. C-101
Sheet 5 of 14

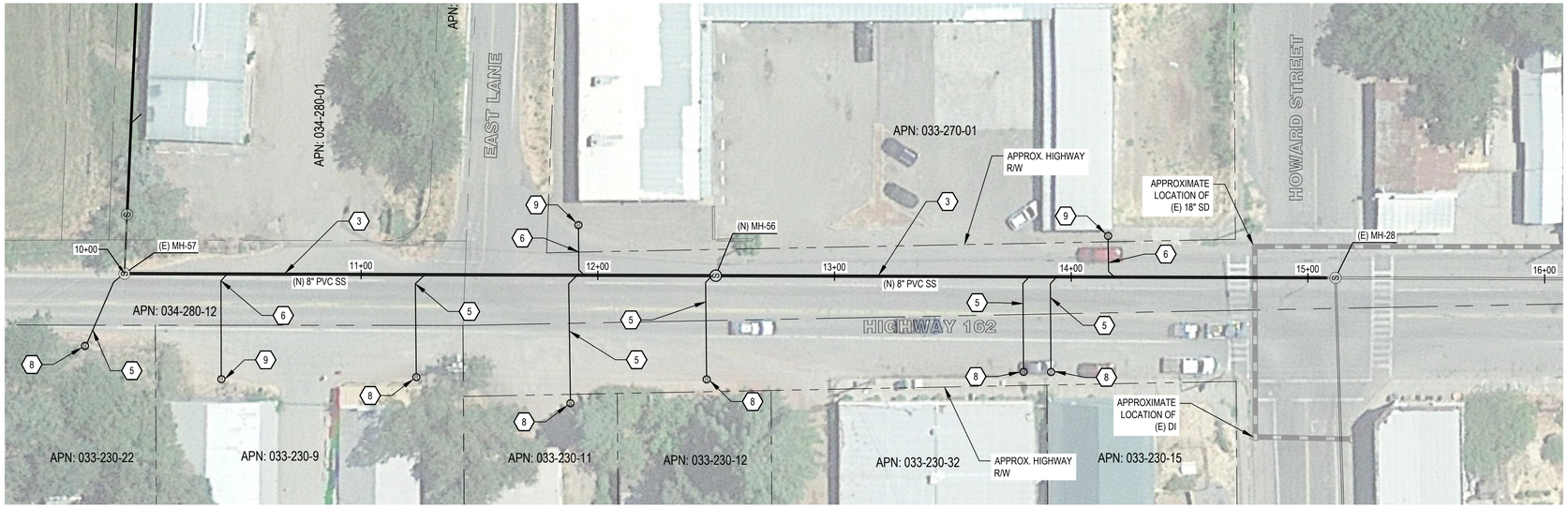

PLAN

0 30' 60' N

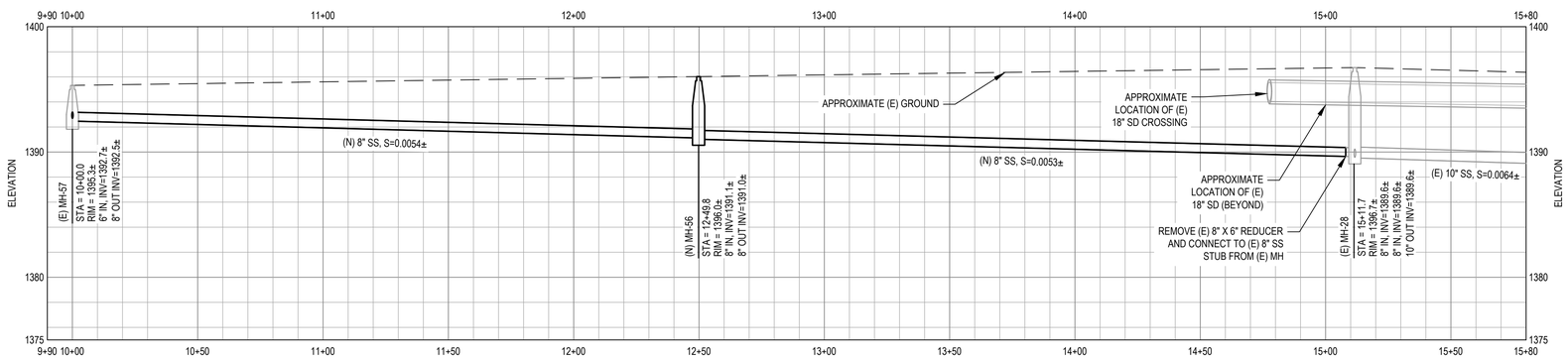

PROFILE

0 6' 12' VERTICAL
0 30' 60' HORIZONTAL

SHEET GENERAL NOTES

1. LOCATION OF EXISTING UTILITIES AND STRUCTURES ARE FROM INFORMATION AVAILABLE AT THE TIME OF DESIGN. EXACT LOCATION AND COMPLETENESS ARE NOT GUARANTEED. CONTRACTOR SHALL NOTIFY THE OWNER AND UNDERGROUND SERVICES ALERT (800) 227-2600 A MINIMUM OF 72 HOURS PRIOR TO ANY EXCAVATION AND SHALL POTHOLE FOR EXACT LOCATION. CONTRACTOR IS RESPONSIBLE FOR LOCATING EXISTING UTILITIES.
2. EXISTING AERIAL BACKGROUND AND BOUNDARIES ARE NOT A PRODUCT OF SURVEY. CONTRACTOR TO VERIFY ACTUAL SITE CONDITIONS PRIOR TO PERFORMING WORK.
3. EXISTING UTILITY DATA FROM COVELO CSD 1961 AND 2008 RECORD DRAWINGS. ELEVATION DATA FROM 1961 RECORD DRAWINGS ADJUSTED FOR 2008 RECORD DRAWINGS VERTICAL DATUM. ALL ELEVATIONS AND STATIONS ARE APPROXIMATE. EXISTING SEWER LATERALS AND CLEANOUTS ARE APPROXIMATE. CONTRACTOR RESPONSIBLE FOR FIELD VERIFYING ALL ELEVATIONS AND STATIONS.
4. EXISTING SEWER LATERALS MAY NOT HAVE CLEANOUTS.
5. PROVIDE ALL TRANSITION COUPLINGS AS NECESSARY.
6. CONTRACTOR TO RESTRIPE ROADWAY TO MATCH EXISTING AFTER FINAL PAVING.
7. PROPERTY BOUNDARIES FROM RAU AND ASSOCIATES INC. IN OCTOBER 2013.
8. UTILITY TRENCH WORK IN STATE ROAD R/W SHALL CONFORM TO CALTRANS TRENCH DETAIL TR-0153.
9. FINAL PAVING FOR THE SEWER MAIN IN THE STATE ROAD R/W SHALL INCLUDE THE ENTIRE SHOULDER WIDTH.
10. REPLACEMENT OF (E) SEWER MAINS AND LATERALS SHALL MATCH (E) ELEVATIONS AND SLOPES UNLESS NOTED OTHERWISE.

HAZARDOUS MATERIALS NOTES

1. EXISTING ASBESTOS MATERIALS EXPECTED ON SITE. CONTRACTOR TO PROPERLY HANDLE AND DISPOSE OF HAZARDOUS MATERIAL.

SHEET KEYNOTES

1. REPLACE (E) MANHOLE WITH (N) 48" MANHOLE. (2 / C-501)
2. REPLACE (E) 6" SS WITH (N) 6" PVC SS.
3. REPLACE (E) 6" ACP WITH (N) 8" PVC SS.
4. RECONNECT (E) SS LATERAL. (5 / C-501)
5. REPLACE (E) SS LATERAL WITH (N) 4" PVC SS LATERAL. (5 / C-501)
6. (N) 4" PVC SS LATERAL. PLUG UPSTREAM OF CLEANOUT FOR FUTURE CONNECTION. (1 / C-502)
7. (N) 48" MANHOLE. (2 / C-501)
8. REMOVE (E) SEWER CLEANOUT WHERE PRESENT ON (E) SEWER LATERAL. PROVIDE (N) SEWER CLEANOUT, FIELD LOCATE WITH OWNER. (4 / C-501)
9. (N) CLEANOUT. (4 / C-501)
10. ADDITIVE BID ITEM.

NOTE: SOME KEYNOTES NOT USED ON THIS SHEET.

No.	Issue	Drawn	Approved	Date

Bar is one inch on original size sheet
0 1"

REGISTERED PROFESSIONAL ENGINEER LUKE D. HALONEN No. C68801 CIVIL STATE OF CALIFORNIA
7/20/2022

GHD Inc.
718 Third Street
Eureka California 95501 USA
T 1 707 443 8326 F 1 707 444 8330 W www.ghd.com

Drawn	R. RIOS	Designer	R. RIOS
Drafting Check	L. HALONEN	Design Check	L. HALONEN
Project Manager	L. HALONEN	Date	7/20/2022
This document shall not be used for construction unless signed and sealed for construction.		Scale	AS SHOWN

Client: COVELO COMMUNITY SERVICES DISTRICT
Project: COLLECTION SYSTEM & WWTP IMPROVEMENTS
Title: SEWER PLAN AND PROFILE - HIGHWAY 162 NORTH
Project No. 11216372
Original Size: ANSI D
Sheet No. C-102
Sheet 6 of 14

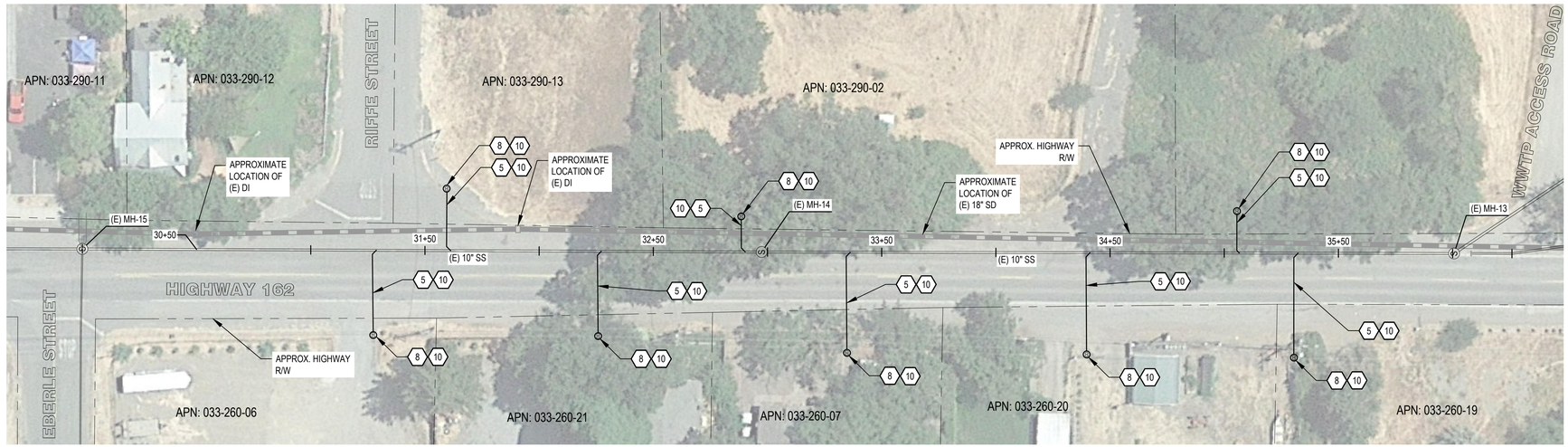

PLAN

0 30' 60' N

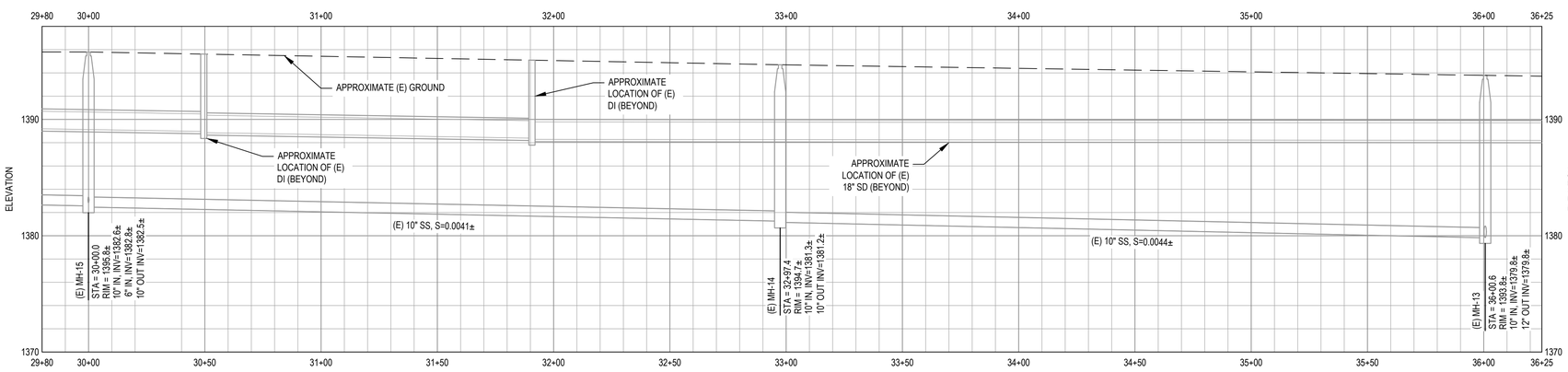

PROFILE

0 6' 12' VERTICAL
0 30' 60' HORIZONTAL

SHEET GENERAL NOTES

1. LOCATION OF EXISTING UTILITIES AND STRUCTURES ARE FROM INFORMATION AVAILABLE AT THE TIME OF DESIGN. EXACT LOCATION AND COMPLETENESS ARE NOT GUARANTEED. CONTRACTOR SHALL NOTIFY THE OWNER AND UNDERGROUND SERVICES ALERT (800) 227-2600 A MINIMUM OF 72 HOURS PRIOR TO ANY EXCAVATION AND SHALL POTHOLE FOR EXACT LOCATION. CONTRACTOR IS RESPONSIBLE FOR LOCATING EXISTING UTILITIES.
2. EXISTING AERIAL BACKGROUND AND BOUNDARIES ARE NOT A PRODUCT OF SURVEY. CONTRACTOR TO VERIFY ACTUAL SITE CONDITIONS PRIOR TO PERFORMING WORK.
3. EXISTING UTILITY DATA FROM COVELO CSD 1961 AND 2008 RECORD DRAWINGS. ELEVATION DATA FROM 1961 RECORD DRAWINGS ADJUSTED FOR 2008 RECORD DRAWINGS VERTICAL DATUM. ALL ELEVATIONS AND STATIONS ARE APPROXIMATE. EXISTING SEWER LATERALS AND CLEANOUTS ARE APPROXIMATE. CONTRACTOR RESPONSIBLE FOR FIELD VERIFYING ALL ELEVATIONS AND STATIONS.
4. EXISTING SEWER LATERALS MAY NOT HAVE CLEANOUTS.
5. PROVIDE ALL TRANSITION COUPLINGS AS NECESSARY.
6. CONTRACTOR TO RESTRIPE ROADWAY TO MATCH EXISTING AFTER FINAL PAVING.
7. PROPERTY BOUNDARIES FROM COUNTY GIS DATA ARE APPROXIMATE.
8. UTILITY TRENCH WORK IN STATE ROAD R/W SHALL CONFORM TO CALTRANS TRENCH DETAIL TR-0153.
9. FINAL PAVING FOR THE SEWER MAIN IN THE STATE ROAD R/W SHALL INCLUDE THE ENTIRE SHOULDER WIDTH.
10. REPLACEMENT OF (E) SEWER MAINS AND LATERALS SHALL MATCH (E) ELEVATIONS AND SLOPES UNLESS NOTED OTHERWISE.

HAZARDOUS MATERIALS NOTES

1. EXISTING ASBESTOS MATERIALS EXPECTED ON SITE. CONTRACTOR TO PROPERLY HANDLE AND DISPOSE OF HAZARDOUS MATERIAL.

SHEET KEYNOTES

1. REPLACE (E) MANHOLE WITH (N) 48" MANHOLE. (2 / C-501)
2. REPLACE (E) 6" SS WITH (N) 6" PVC SS.
3. REPLACE (E) 6" ACP WITH (N) 8" PVC SS.
4. RECONNECT (E) SS LATERAL. (5 / C-501)
5. REPLACE (E) SS LATERAL WITH (N) 4" PVC SS LATERAL. (5 / C-501)
6. (N) 4" PVC SS LATERAL. PLUG UPSTREAM OF CLEANOUT FOR FUTURE CONNECTION. (1 / C-502)
7. (N) 48" MANHOLE. (2 / C-501)
8. REMOVE (E) SEWER CLEANOUT WHERE PRESENT ON (E) SEWER LATERAL. PROVIDE (N) SEWER CLEANOUT, FIELD LOCATE WITH OWNER. (4 / C-501)
9. (N) CLEANOUT. (4 / C-501)
10. ADDITIVE BID ITEM.

NOTE: SOME KEYNOTES NOT USED ON THIS SHEET.

No.	Issue	Drawn	Approved	Date

Bar is one inch on original size sheet
0 1"

REGISTERED PROFESSIONAL ENGINEER LUKE D. HALONEN No. C0800 CIVIL STATE OF CALIFORNIA
7/20/2022

GHD Inc.
718 Third Street
Eureka California 95501 USA
T 1 707 443 8326 F 1 707 444 8330 W www.ghd.com

Drawn	R. RIOS	Designer	R. RIOS
Drafting Check	L. HALONEN	Design Check	L. HALONEN
Project Manager	L. HALONEN	Date	7/20/2022
This document shall not be used for construction unless signed and sealed for construction.		Scale	AS SHOWN

Client: COVELO COMMUNITY SERVICES DISTRICT
Project: COLLECTION SYSTEM & WWTP IMPROVEMENTS
Title: SEWER PLAN AND PROFILE - HIGHWAY 162 SOUTH
Project No. 11216372
Original Size: ANSI D
Sheet No. C-103
Sheet 7 of 14

SHEET GENERAL NOTES

1. LOCATION OF EXISTING UTILITIES AND STRUCTURES ARE FROM INFORMATION AVAILABLE AT THE TIME OF DESIGN. EXACT LOCATION AND COMPLETENESS ARE NOT GUARANTEED. CONTRACTOR SHALL NOTIFY THE OWNER AND UNDERGROUND SERVICES ALERT (800) 227-2600 A MINIMUM OF 72 HOURS PRIOR TO ANY EXCAVATION AND SHALL POTHOLE FOR EXACT LOCATION. CONTRACTOR IS RESPONSIBLE FOR LOCATING EXISTING UTILITIES.
2. EXISTING AERIAL BACKGROUND AND BOUNDARIES ARE NOT A PRODUCT OF SURVEY. CONTRACTOR TO VERIFY ACTUAL SITE CONDITIONS PRIOR TO PERFORMING WORK.
3. FOR PV SYSTEM SEE DESIGN/BUILD NOTES ON E-101.
4. ENTIRE OZONE SYSTEM CANOPY & ROOF IS AN ADDITIVE BID ITEM.
5. ENTIRE PV SYSTEM AND ALL ASSOCIATED WORK IS AN ADDITIVE BID ITEM.

SHEET KEYNOTES

1. (N) OZONE SYSTEM CANOPY & ROOF PER. 1 / S-101
2. PROVIDE POWER PULL BOX.
3. PROVIDE (3) 2" CONDUITS AND WIRE IN TRENCH BETWEEN PV ARRAY AND PV EQUIPMENT. SEE ELECTRICAL PLAN E-101. COORDINATE WITH (E) UNDERGROUND UTILITIES .

10. ADDITIVE BID ITEM.

No.	Issue	Drawn	Approved	Date

Bar is one inch on original size sheet
0 1"

REGISTERED PROFESSIONAL ENGINEER LUKE D. HALONEN No. C84690 CIVIL STATE OF CALIFORNIA
7/20/2022

GHD Inc.
718 Third Street
Eureka California 95501 USA
T 1 707 443 8326 F 1 707 444 8330 W www.ghd.com

Drawn	H. CINKUTIS	Designer	H. CINKUTIS
Drafting Check	L. HALONEN	Design Check	B.C. / C.R.
Project Manager	L. HALONEN	Date	7/20/2022
This document shall not be used for construction unless signed and sealed for construction.		Scale	AS SHOWN

Client COVELO COMMUNITY SERVICES DISTRICT
Project COLLECTION SYSTEM & WWTP IMPROVEMENTS
Title WWTP SITE PLAN
Project No. 11216372
Original Size ANSI D
Sheet No. C-104
Sheet 8 of 14

Plot Date: 20 July 2022 - 2:20 PM Plotted By: Luke Halonen Filename: \\ghdnet\ghd\US\Redding\Projects\561\11216372\digital_design\acad 2020\Sheets\11216372_C-104.dwg

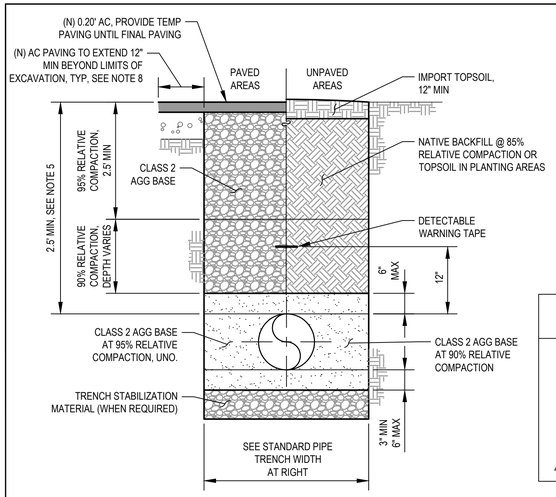

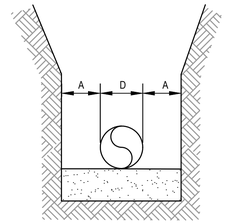

PIPE DIA "D"	MINIMUM "A"	MAXIMUM "A"
< 4"	3"	6"
4" TO 6"	6"	12"
6" TO 15"	8"	14"
16" TO 21"	10"	16"
24" TO 30"	12"	18"
33" TO 42"	15"	21"
48" & LARGER	18"	24"

NOTES:

1. WIDER TRENCHES MAY REQUIRE HIGHER STRENGTH PIPE AND/OR SPECIAL BEDDING.
2. DIFFERING TRENCH WIDTHS REQUIRE PRIOR APPROVAL OF ENGINEER.
3. IN MAKING EXCAVATIONS FOR THIS PROJECT, THE CONTRACTOR SHALL BE FULLY RESPONSIBLE FOR PROVIDING & INSTALLING ADEQUATE SHEETING, SHORING & BRACING AS MAY BE NECESSARY AS A PRECAUTION AGAINST SLIDES OR CAVE-INS, AND TO PROTECT ALL (E) IMPROVEMENTS OF ANY KIND, EITHER ON PUBLIC OR PRIVATE PROPERTY, FULLY FROM DAMAGE.
4. SATISFACTORY NATIVE BACKFILL MATERIAL USED AS UTILITY TRENCH BACKFILL BELOW UNPAVED AREAS SHALL BE APPROVED BY THE ENGINEER PRIOR TO USE.
5. 2-SACK SLURRY BACKFILL MAY BE USED IN TRENCH WHEN MINIMUM PIPE COVER NOT POSSIBLE, WHEN APPROVED BY OWNER'S REPRESENTATIVE.
6. DETECTABLE WARNING TAPE SHALL BE BRIGHT COLORED, CONTINUOUSLY PRINTED, MINIMUM 6" WIDE BY 4 MIL. THICK, MANUFACTURED FOR DIRECT BURIAL.
7. DETECTABLE WARNING TAPE NOT REQUIRED FOR IRRIGATION LINES.
8. SAW CUT NEAT MIN 12" BEYOND UTILITY TRENCH BEFORE FINAL PAVING.
9. PROVIDE TACK COAT TO ALL VERTICAL SURFACES OF EXISTING PAVEMENT, CURBS, GUTTERS AND CONSTRUCTION JOINTS IN THE SURFACING AGAINST WHICH NEW ASPHALT CONCRETE PAVING IS PLACED.
10. WORK IN GRAVEL AREAS SHALL BE BACKFILLED TO SURFACE WITH CLASS 2 SAME AS PAVED AREAS, UNO.
11. WORK IN HIGHWAY RIGHT OF WAY SHALL CONFORM TO STATE HIGHWAY TRENCH DETAIL TR-0153

1 C-501 TYPICAL TRENCH DETAIL

SCALE: NTS

NOTES:

1. WHEN MH IS INSTALLED IN UNIMPROVED AREAS, THE TOP OF THE COVER SHALL BE1'-0" MIN ABOVE ADJACENT FG.
2. MIN OF ONE 3" & ONE 8" GRADE ADJUSTMENT RINGS. MAX HEIGHT OF GRADE ADJUSTMENT RINGS EQUALS 20" ALTERNATELY. THE CONTRACTOR MAY CAST GRADE ADJUSTMENT RINGS IN PLACE.
3. SET ALL BARREL SECTIONS & TAPERED SECTIONS IN PLASTIC GASKET, RAM-NEK OR APPROVED EQUAL. TYPICAL JOINT 1 1/2" (3/4" x 2 1/2") RAM-NEK SEAL (TWO SEALS IN HIGH WATER TABLE AREAS).
4. CONE SECTION (TAPER) MUST BE CONCENTRIC FOR 48" MH UNLESS OTHERWISE SPECIFIED & APPROVED BY THE ENGINEER.
5. CONSTRUCT ALL FLOW CHANNELS OF PIPE WHEREVER POSSIBLE. AFTER LOWER RING SECTION IS SET, BREAK OUT TOP HALF OF PIPE FLUSH WITH INSIDE FACE OF MH WALL AND CONSTRUCT SHELF & U-SHAPED CHANNEL. MAKE ELEVATION CHANGES GRADUALLY & DIRECTIONAL CHANGES WITH SMOOTH CURVES.
6. POUR-IN-PLACE BASE SHALL BE POURED FULL THICKNESS TO UNDISTURBED SIDES OF EXCAVATION OR SHALL BE FORMED. JOINT BETWEEN BASE AND BARREL TO BE SEALED WITH 1 1/2" (3/4" x 2 1/2") RAM-NEK SEAL (TWO SEALS IN HIGH WATER TABLE AREAS) OR PLASTER 6" FILLET. 1:3 MORTAR. PRECAST BASE TO BE IN ACCORDANCE TO ASTM C478 AND PLACED ON 1'-0" THICK 3/4" DRAIN ROCK SUB-BASE INSTALLED AGAINST UNDISTURBED EARTH.
7. JOINT BETWEEN BASE & BARREL TO BE SEALED WITH 1 1/2" (3/4" x 2 1/2") RAM-NEK SEAL (TWO SEALS IN HIGH WATER AREAS).
8. CLASS "B" CONCRETE COLLAR SHALL BE FLUSH WITH FG.
9. STANDARD MH BARREL SECTION PER ASTM C478.
10. BARREL & TAPER SECTIONS MAY BE CAST-IN-PLACE AS APPROVED AND DIRECTED BY THE ENGINEER.
11. 48" INSIDE DIAMETER MH TO BE USED FOR SEWER MAINS LESS THAN 18" DIAMETER & LESS THAN 8 FT DEEP FROM FG.
12. 6 INCH MINIMUM IF POURED-IN-PLACE.
13. A FLEXIBLE COUPLING, AS APPROVED BY THE ENGINEER, SHALL BE INSTALLED IN THE SEWER MAIN WITHIN 1'-0" OF THE BASE OF THE MH (TYPICAL NOT SHOWN) NOT REQUIRED WHEN PRECAST BASES ARE MANUFACTURED WITH FLEX COUPLINGS ALREADY INSTALLED.
14. CONTRACTOR TO PROVIDE ALL COMPONENTS.

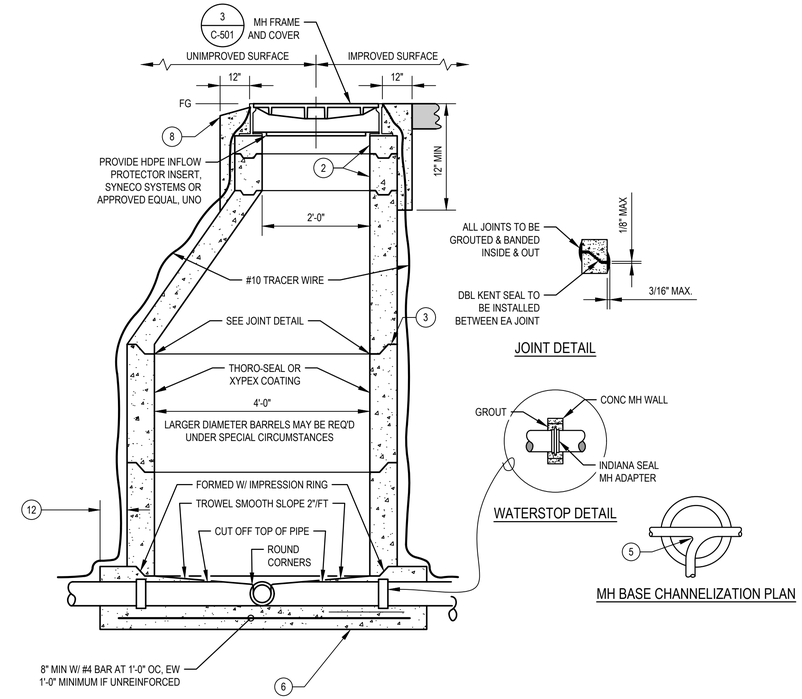

2 C-501 TYPICAL SANITARY SEWER MANHOLE

NOT TO SCALE

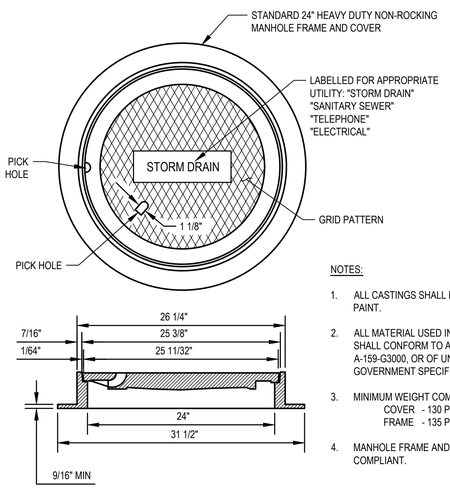

NOTES:

1. ALL CASTINGS SHALL BE DIPPED IN ASPHALT PAINT.
2. ALL MATERIAL USED IN MANUFACTURING SHALL CONFORM TO ASTM DESIGNATION A-159-G3000, OR OF UNITED STATES GOVERNMENT SPECIFICATIONS QQ1-652B.
3. MINIMUM WEIGHT COMPONENTS:
   COVER - 130 POUNDS
   FRAME - 135 POUNDS
4. MANHOLE FRAME AND COVER SHALL BE ADA COMPLIANT.

3 C-501 MANHOLE FRAME AND COVER

NOT TO SCALE

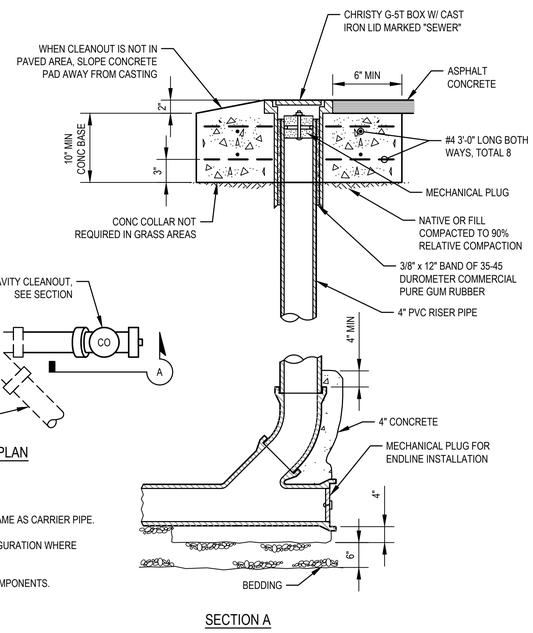

NOTES:

1. ALL CLEANOUT MATERIAL TO BE SAME AS CARRIER PIPE.
2. HORIZONTAL LATERAL WYE CONFIGURATION WHERE SHOWN ON PLAN.
3. CONTRACTOR TO PROVIDE ALL COMPONENTS.

4 C-501 TYPICAL GRAVITY SEWER CLEANOUT

SCALE: NTS

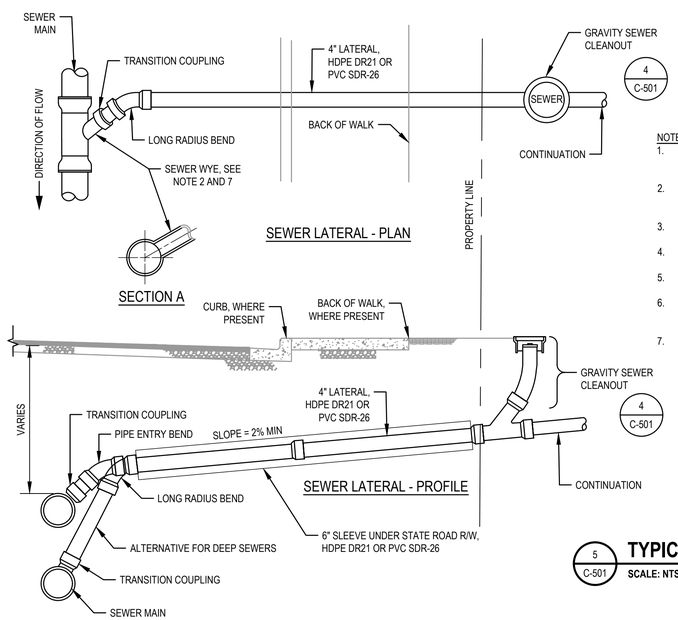

NOTES:

1. IN NO CASE SHALL A LATERAL CONNECT TO THE SANITARY SEWER MAIN DIRECTLY ON TOP OF THE PIPE.
2. MINIMUM INVERT GRADE OF WYE EQUALS CENTERLINE GRADE OF MAINLINE SEWER AT WYE, OR AS DIRECTED BY ENGINEER.
3. ONLY ONE CONNECTION MAY BE MADE IN EACH SECTION OF SANITARY SEWER MAIN.
4. ALL LATERAL PIPE SHALL HAVE A MINIMUM SLOPE OF 2%.
5. ALL LATERAL PIPE JOINTS SHALL BE COMPRESSION TYPE.
6. WHENEVER BANDS ARE TO BE USED THEY SHALL BE DUAL SHEAR BAND ARC COUPLINGS OR APPROVED EQUAL.
7. SEWER WYE SHALL MATCH MATERIAL OF (N) SEWER MAINS. PROVIDE TRANSITION COUPLINES AS REQUIRED WHEN CONNECTING TO (E) SEWER MAINS.

5 C-501 TYPICAL SANITARY SEWER LATERAL

SCALE: NTS

No.	Issue	Drawn	Approved	Date

Bar is one inch on original sheet
0 1"

REGISTERED PROFESSIONAL ENGINEER LUKE D. HALONEN No. C49801 CIVIL STATE OF CALIFORNIA
7/20/2022

GHD Inc.
718 Third Street
Eureka California 95501 USA
T 1 707 443 8326 F 1 707 444 8330 W www.ghd.com

Drawn	R. RIOS	Designer	R. RIOS
Drafting Check	L. HALONEN	Design Check	L. HALONEN
Project Manager	L. HALONEN	Date	7/20/2022
This document shall not be used for construction unless signed and sealed for construction.		Scale	AS SHOWN

Client COVELO COMMUNITY SERVICES DISTRICT
Project COLLECTION SYSTEM & WWTP IMPROVEMENTS
Title CIVIL DETAILS 1 OF 2
Project No. 11216372
Original Size ANSI D
Sheet No. C-501
Sheet 9 of 14

TYPICAL TRENCH DETAIL (NOT TO SCALE)

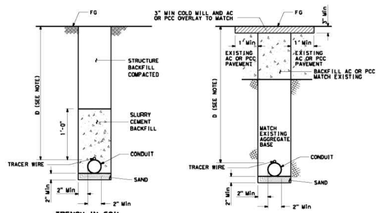

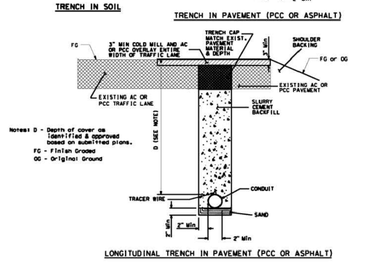

See page 2 for additional notes.

- All work must be authorized by the encroachment permit, and/or as directed by the State's representative.
- A tracer wire must be placed on top of the conduit unless specified not to.
- Clearance between the trench wall and encroachment work less than 6 inches in width shall be a minimum of 2 inches. Clearance between the trench wall and encroachment work greater than 6 inches width shall be a minimum of 6 inches.
- When the trench width is less than 2' the backfill for subgrade must consist of either slurry cement or Controlled Low-Strength Material (CLSM).
- When trench width is greater than 2' compacted aggregate base may be used for backfill.
- Structure backfill must conform to Section 19-3.02C of the Standard Specifications.
- For trench located under unimproved surface, structure backfill can use the original soil. Soil must be compacted by mechanical means. Ponding, jetting or flooding are not allowed. Slurry cement backfill is optional at the discretion of the Caltrans District.
- Slurry cement backfill must conform to Section 19-3.02E of the Standard Specifications.
- Aggregate base shall conform to Section 26 of the Standard Specifications.
- CLSM must conform to Section 19-3.02G of the Standard Specifications. When CLSM is utilized the mix design and test results must be submitted to the State's representative. See Appendix H of the Encroachment Permits Manual for additional information.
- Cold planed surface and overlay shall be to the nearest lane line for the entire length of the trench/disturbed areas, and/or as directed by the State's representative.
- A paving notch ("T" Cut) shall be cold planed in exist asphalt concrete to a minimum width of 1.0' beyond each side of the trench and to a depth of 3" for the final layer of HMA.
- HMA or PCC to replace pavement section shall match existing pavement depth, unless directed otherwise by the State's representative.
- Hot mix asphalt must conform to Section 39 of the Standard Specifications.
- A tack coat of asphaltic emulsion conforming to Section 39-2.01C (3) (f) shall be applied.
- When the trench is within 4' of curb and gutter, additional cold planing may be required at the discretion of the State's representative.
- Pavement markings and/or striping removed or damaged during construction must be replaced as directed by the State's representative.
- Other trench related details are shown in Chapter 6 of the Encroachment Permits Manual as well as the Trenching and Shoring Manual. Both publications can be found on the State of California, Department of Transportation's website.

1 / C-502 **STATE HIGHWAY TRENCH DETAIL - TR-1053**
NOT TO SCALE

No.	Issue	Drawn	Approved	Date

Bar is one inch on original size sheet
0 1"

REGISTERED PROFESSIONAL ENGINEER LUKE D. HALONEN No. C68690 CIVIL STATE OF CALIFORNIA
7/20/2022

GHD Inc.
718 Third Street
Eureka California 95501 USA
T 1 707 443 8326 F 1 707 444 8330 W www.ghd.com

Drawn	R. RIOS	Designer	R. RIOS
Drafting Check	L. HALONEN	Design Check	L. HALONEN
Project Manager	L. HALONEN	Date	7/20/2022
This document shall not be used for construction unless signed and sealed for construction.		Scale	AS SHOWN

Client / Project: COVELO COMMUNITY SERVICES DISTRICT COLLECTION SYSTEM & WWTP IMPROVEMENTS
Title: CIVIL DETAILS 2 OF 2
Project No. 11216372
Original Size: ANSI D
Sheet No. C-502
Sheet 10 of 14

STRUCTURAL ABBREVIATIONS

AB	ANCHOR BOLT
ABC	AGGREGATE BASE COURSE
ABV	ABOVE
AC	AGGREGATE COURSE
ACI	AMERICAN CONCRETE INSTITUTE
ADD'L	ADDITIONAL
AISC	AMERICAN INSTITUTE OF STEEL CONSTRUCTION
AISI	AMERICAN IRON AND STEEL INSTITUTE
AITC	AMERICAN INSTITUTE OF TIMBER CONSTRUCTION
ALT	ALTERNATE
ALUM	ALUMINUM
ANSI	AMERICAN NATIONAL STANDARDS INSTITUTE
APA	AMERICAN PLYWOOD ASSOCIATION
ARCH	ARCHITECT/ARCHITECTURAL
ASTM	AMERICAN SOCIETY FOR TESTING AND MATERIALS
AWS	AMERICAN WELDING SOCIETY
B	BOTTOM
B/	BOTTOM OF
BB	BOTTOM BARS
BO	BOND
BLDG	BUILDING
BLKG	BLOCKING
BM	BEAM
BN	BOUNDARY NAIL
BRG	BEARING
BS	BOTH SIDES
BTWN	BETWEEN
C	CHANNEL
C/C	CENTER TO CENTER
CANT	CANTILEVER
CAP	CAPACITY
CBC	CALIFORNIA BUILDING CODE
CF	CUBIC FEET
CHKD	CHECKED
CI	CANTRACTOR INSTALLED
CJ	CONTRACTION/CONTROL JOINT
CL	CENTERLINE
CLR	CLEAR
CLG	CEILING
CMU	CONCRETE MASONRY UNIT
COL	COLUMN
CONC	CONCRETE
CONN	CONNECTION
CONSTR	CONSTRUCTION
CONT	CONTINUOUS
COORD	COORDINATE
CRSI	CONCRETE REINFORCING STEEL INSTITUTE
CTR/CTR'D	CENTER/CENTERED
d	PENNY (NAIL SIZE)
DBL	DOUBLE
DEG	DEGREES
DET	DETAIL
DF	DOUGLAS FIR
DIA	DIAMETER
DIAG	DIAGONAL
DIM	DIMENSION
DISCONT	DISCONTINUE
DL	DEAD LOAD
DN	DOWN
Do	DITTO
DP	DEEP
DWG	DRAWING
DWL	DOWEL
(E)	EXISTING
EA	EACH
EF	EACH FACE
EG	FOR EXAMPLE
EL/ELEV	ELEVATION
EMBED	EMBEDMENT
EN	EDGE NAIL
ENGR	ENGINEER
EQ	EQUAL
EQUIP	EQUIPMENT
ETC	ET CETERA
EW	EACH WAY
EWEF	EACH WAY EACH FACE
(E)/EXIST	EXISTING
EXP	EXPANSION
EXT	EXTERIOR
FD	FLOOR DRAIN
FF	FINISHED FLOOR
FG	FINISHED GRADE
FH	FULL HEIGHT
FIN	FINISH
FL	FLOOR
FLG	FLANGE
FN	FACE NAIL
FND	FOUNDATION
FO	FACE OF
FOM	FACE OF MASONRY
FOW	FACE OF WALL
FRMG	FRAMING
FS	FAR SIDE
FTG	FOOTINGU
GA	GAUGE
GALV	GALVANIZED
GF	GOVERNMENT FURNISHED
GR	GRADE
GRT	GROUT
GSN	GENERAL STRUCTURAL NOTES
GYP	GYPSUM
HAS	HEADED ANCHOR STUDS
HD	HOLDOWN
HDG	HOT DIPPED GALVANIZED
HEF	HORIZONTAL EACH FACE
HIF	HORIZONTAL INSIDE FACE
HK	HOOK
HM	HOLLOW METAL
HOF	HORIZONTAL OUTSIDE FACE
HORIZ	HORIZONTAL
HP	HIGH POINT
HSS	TUBE STEEL
HT	HEIGHT
ID	INSIDE DIAMETER
IE	THAT IS
INFO	INFORMATION
INT	INTERIOR
INTERMED	INTERMEDIATE
INTERSECT	INTERSECTION
INV	INVERT
IBC	INTERNATIONAL BUILDING CODE
JST	JOIST
JT	JOINT
L	ANGLE
LBS	POUNDS
LG	LONG
LL	LIVE LOAD
LLH	LONG LEG HORIZONTAL
LLV	LONG LEG VERTICAL
LOC	LOCATION
LONGIT/LONGL	LONGITUDINAL
LP	LOW POINT
LT	LEFT
LWR	LOWER
MACH	MACHINE
MAINT	MAINTENANCE
MAS	MASONRY
MAX	MAXIMUM
MB	MACHINE BOLT
MC	CHANNEL
MCJT	MASONRY CONTROL JOINT
MECH	MECHANICAL
MFR	MANUFACTURER
MIN	MINIMUM
MISC	MISCELLANEOUS
MHHW	MEAN HIGHER HIGH WATER
MLLW	MEAN LOWER LOW WATER
MNTG	MOUNTING
MO	MASONRY OPENING
MOD	MODIFIED
MTL	METAL
(N)	NEW
NIC	NOT IN CONTRACT
NO.	NUMBER
NOM	NOMINAL
NS	NEAR SIDE
NTS	NOT TO SCALE
OC	ON CENTER
OD	OUTSIDE DIAMETER
OF	OUTSIDE FACE
OPG	OPENING
OPP	OPPOSITE
PEB	PRE ENGINEERED BUILDING
PEMB	PRE ENGINEERED METAL BLDG
PL	PLATE
PLCS	PLACES
PLYWD	PLYWOOD
PNL	PANEL
PREFAB	PREFABRICATED
PT	POINT, PRESSURE TREATED
PVMT	PAVEMENT
QTY	QUANTITY
R/RAD	RADIUS
REF	REFERENCE
REINF	REINFORCING
REQD	REQUIRED
RF	ROOF
RM	ROOM
SCHED/SCH	SCHEDULE
SEC	SECTION
SF	SQUARE FEET
SHT	SHEET
SIM	SIMILAR
SP	SPACE/SPACES
SPCG	SPACING
SPEC	SPECIFICATIONS
SST	STAINLESS STEEL
STD	STANDARD
STIFF	STIFFENER
STL	STEEL
STRUCT	STRUCTURAL
SYM	SYMMETRICAL
T	TOP
T/	TOP OF
T&B	TOP AND BOTTOM
TB	TOP OF BAR
THK	THICK
TOC	TOP OF CONCRETE
TOS	TOP OF STEEL
TYP	TYPICAL
UBC	UNIFORM BUILDING CODE
UHMW	ULTRA HIGH MOLECULAR WEIGHT
UNO	UNLESS NOTED OTHERWISE
UON	UNLESS OTHERWISE NOTED
UPR	UPPER
UT	ULTRASONIC TESTING
VEF	VERTICAL EACH FACE
VERT	VERTICAL
VIF	VERTICAL INSIDE FACE
VOF	VERTICAL OUTSIDE FACE
W/	WITH
W OR WF	WIDE FLANGE (BEAM)

STRUCTURAL ABBREVIATIONS (CONTINUED)

WGT	WEIGHT
W/O	WITHOUT
WP	WORK POINT
WS	WATERSTOP
WT	TEE
&	AND
@	AT
°	DEGREE
Ø	DIAMETER
'	FEET
"	INCHES
#	NUMBER
±	PLUS OR MINUS

STRUCTURAL LEGEND

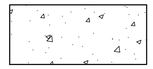

CONCRETE IN SECTION

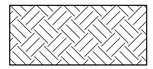

EARTH IN SECTION

FOOTING

GENERAL SHEET NOTES

1. ABBREVIATIONS ON THIS SHEET APPLY ONLY TO THE STRUCTURAL DRAWINGS, REFER TO OTHER DISCIPLINES FOR APPLICABLE SYMBOLS NOT PROVIDED HERE.
2. THIS IS A STANDARD ABBREVIATION AND LEGEND SHEET, THEREFORE, SOME ABBREVIATIONS AND LEGEND SYMBOLS MAY APPEAR ON THIS SHEET AND MAY NOT BE UTILIZED ON THIS PROJECT.
3. DO NOT SCALE DRAWINGS.

GENERAL STRUCTURAL NOTES

DESIGN BASIS

1. 2019 CALIFORNIA BUILDING CODE (CBC)
2. RISK CATEGORY = II
3. WIND LOAD DESIGN BASED ON THE FOLLOWING PARAMETERS:
   BASIC WIND SPEED, V = 110 MPH (3 SEC. GUST).
4. SEISMIC LOAD DESIGN BASED ON THE FOLLOWING PARAMETERS:
   SITE CLASS = D
   IMPORTANCE FACTOR, Ie = 1.0
   SEISMIC DESIGN CATEGORY = D
   BASIC SEISMIC FORCE RESISTING SYSTEM = STEEL CANTILEVER COLUMNS
   RESPONSE MODIFICATION FACTOR, R = 1.25
   METHOD OF ANALYSIS: EQUIVALENT LATERAL FORCE PROCEDURE
   SPECTRAL RESPONSE ACCELERATION PARAMETERS:
   SS = 1.87 g S1 = 0.78 g
   SDS = 1.25 g SD1 = NULL
5. DESIGN LIVE LOADS:
   ROOF LIVE LOAD = 20 PSF
   ROOF MOUNTED SOLAR ARRAY = 3 PSF

GENERAL NOTES

1. ALL WORK TO CONFORM TO REQUIREMENTS OF ALL PUBLICATIONS AND NOTES LISTED UNDER "DESIGN BASIS".
2. CIVIL DRAWINGS, MECHANICAL/ELECTRICAL/PLUMBING DRAWINGS AND ALL OTHER DRAWINGS AS REQUIRED SHALL BE USED IN CONJUNCTION WITH STRUCTURAL DRAWINGS TO DEVELOP DETAILS AND DIMENSIONS FOR SHOP DRAWINGS, FABRICATION, ERECTION AND CONSTRUCTION. CONTRACTOR IS TO COORDINATE EQUIPMENT, SUPPORT CONDITIONS AND DIMENSIONS FOR SUPPORTING BEAMS, FRAMES AND OPENINGS FOR MECHANICAL EQUIPMENT AND PROVIDE THIS INFORMATION FOR REVIEW.
3. THE CONTRACTOR IS TO VERIFY ALL EXISTING CONDITIONS AND ALL DIMENSIONS IN FIELD PRIOR TO START OF CONSTRUCTION AND PROTECT AND MAINTAIN ALL EXISTING CONSTRUCTION AND ITS CONTENTS IN FULL.
4. SEE MANUFACTURER'S INSTRUCTIONS FOR MOUNTING AND SECURING MECHANICAL EQUIPMENT.
5. THE CONTRACTOR SHALL MAINTAIN A SET OF LATEST REVIEWED SHOP DRAWINGS ON JOB SITE.
6. THE STRUCTURE HAS BEEN DESIGNED TO BE STABLE AND SELF SUPPORTING AFTER THE CONSTRUCTION IS COMPLETE. IT IS THE CONTRACTOR'S SOLE RESPONSIBILITY FOR THE BUILDING'S STABILITY DURING CONSTRUCTION. THIS RESPONSIBILITY ALSO INCLUDES BUT IS NOT LIMITED TO METHOD AND SEQUENCE OF ERECTION, TEMPORARY SHORING AND TEMPORARY BRACING.
7. IT IS THE CONTRACTOR'S SOLE RESPONSIBILITY TO FOLLOW ALL APPLICABLE SAFETY CODES AND REGULATIONS DURING ALL PHASES OF CONSTRUCTION.
8. SHOULD ANY INFORMATION ON THE STRUCTURAL DRAWINGS CONFLICT WITH THE SPECIFICATIONS OR ANY OTHER PART OF THE DRAWINGS, THE CONTRACTOR SHALL NOTIFY THE ARCHITECT AND AN INTERPRETATION WILL BE GIVEN.
9. ALL SECTIONS, DETAILS, NOTES, DIMENSIONS AND CONDITIONS ARE APPLICABLE AT ANY OTHER LOCATION WHERE

GENERAL STRUCTURAL NOTES (CONTINUED)

FOUNDATION NOTES

1. POLE FOUNDATION DESIGN BASED ON A 150 PSF ALLOWABLE LATERAL BEARING PRESSURE FOR SANDY SOILS.

CONCRETE NOTES

1. ALL WORK TO CONFORM TO THE REQUIREMENTS OF THE ACI "BUILDING CODE REQUIREMENTS FOR REINFORCED CONCRETE" (ACI 318-LATEST EDITION) AND "DETAILS AND DETAILING OF CONCRETE REINFORCEMENT" (ACI 315-LATEST EDITION).
2. MINIMUM COMPRESSIVE STRENGTH OF CONCRETE AT 28 DAYS:

   3000 PSI (NORMAL WEIGHT) AT ALL CONCRETE ELEMENTS.

   MAXIMUM SLUMP: 5" (3" AT SLOPING SURFACES; REFER TO SPECIFICATIONS FOR SLUMP LIMITS).

   PRIOR TO PLACING CONCRETE, MIX DESIGNS SHALL BE SUBMITTED FOR REVIEW.
3. ALL BAR REINFORCING FOR CONCRETE TO CONFORM TO ASTM A 615 GRADE 60, DEFORMED.
4. UNLESS OTHERWISE SHOWN, LOCATE REINFORCING BARS WITH FOLLOWING CLEAR DIMENSION TO FACE OF CONCRETE:

   CONCRETE ON GROUND: 3" CLEAR.

   EXTERIOR EXPOSED SURFACES OR SURFACES AGAINST EARTH:
   2" CLEAR FOR #6 AND GREATER
   1-1/2" CLEAR FOR #5 AND SMALLER

   SLABS ON GRADE: 1" CLEAR FROM TOP OF SLAB

   INTERIOR SURFACES:
   BEAMS AND GIRDERS: 1-1/2" CLEAR
   SLABS AND WALLS: 3/4" CLEAR

   PIER / PILASTER / COLUMN TIES: 1-1/2" CLEAR
5. CONCRETE ACCESSORIES MUST BE ADEQUATE TO MAINTAIN REINFORCING ACCURATELY IN PLACE AND BE NON-CORROSIVE, NON-STAINING TYPE.
6. REFERENCE SPECIFICATIONS FOR CONCRETE CURING AND PROTECTION. BEGIN CONCRETE CURING AS SOON AS FINISHING OPERATIONS ARE COMPLETE (WITHIN TWO HOURS).
7. REFER TO ARCHITECTURAL AND MECHANICAL/ELECTRICAL/PLUMBING DRAWINGS FOR ALL DEPRESSIONS, REVEALS, GROOVES, REGLETS, DOVETAILS, CURBS, TREAD INSERTS, SLAB INSERTS, PROJECTIONS, SILLS, PIPE SLEEVES, DUCT OPENINGS, CONDUIT OPENINGS, ETC. THAT ARE TO BE CAST WITH CONCRETE.
8. LIQUID MEMBRANE FORMING CURING COMPOUNDS SHALL COMPLY WITH ASTM C 309, TYPE I, CLASS A.
9. ALL PROPRIETARY ANCHORING SYSTEMS TO BE INSTALLED INTO CONCRETE OR MASONRY ELEMENTS IN STRICT ACCORDANCE WITH THE MANUFACTURER'S INSTRUCTIONS USING THE REQUIRED SUPPLEMENTAL COMPONENTS SUCH AS SCREEN TUBES, DOWELING ADHESIVES, ETC.

   CONDITIONS AND DETAILS ARE SIMILAR BUT ARE NOT SPECIFICALLY NOTED AS SUCH OR ARE NOT SHOWN.

WOOD NOTES

1. ALL WORK TO CONFORM TO THE REQUIREMENTS OF THE "NATIONAL DESIGN SPECIFICATION FOR WOOD CONSTRUCTION" (ANSI/NFOPA NDS-2012) AS RECOMMENDED BY THE AMERICAN FOREST & PAPER ASSOCIATION.
2. THE STANDARD WOOD DETAILS AND THE NAILING, ETC., CALLED FOR IN THESE NOTES ARE MINIMUM REQUIREMENTS AND WILL APPLY TO ALL WORK EXCEPT WHERE MORE STRINGENT REQUIREMENTS ARE SHOWN ELSEWHERE. ALL WOOD CONSTRUCTION SHALL BE IN ACCORDANCE WITH CHAPTER 23 OF THE 2019 CBC.
3. FRAMING LUMBER SHALL BE COAST DOUGLAS FIR OR REDWOOD GRADED AS FOLLOWS: ANY MEMBER WHICH FALLS BELOW GRADE OR HAS DEFECTS WHICH AFFECTS SERVICEABILITY SHALL BE REJECTED. ALL STRUCTURAL FRAMING SHALL BE SURFACED DRY WITH 19% OR LESS MOISTURE.
   BEAMS & JOISTS SHALL BE DF-L#1
   POSTS, HEADERS, AND STIFFENERS (4x OR LESS) SHALL BE DF-L#1
4. ROOF PLYWOOD PANELS SHALL BE APA RATED STRUCTURAL 1, 32/16, EXTERIOR. MINIMUM PANEL WIDTH 24". THICKNESS AS SHOWN ON PLANS OR ⅝" MIN.
5. THE MINIMUM REQUIREMENTS FOR DETAILS NOT SHOWN WILL BE PER 2019 CBC CHAPTER 23, INCLUDING NAILING PER TABLE 2304.9.1.
6. BOLTS SHALL BE ¾ INCH DIAMETER A307 UNO. ALL BOLTS IN BEARING CONTACT WITH WOOD SHALL HAVE A MALLEABLE IRON WASHER ON CONTACT SURFACE. USE CUT WASHERS ONLY WHERE DETAILED.
7. FOR CONVENIENCE FRAMING CONNECTIONS BY THE SIMPSON COMPANY, PLEASANTON, CA, ARE CALLED OUT ON THE DRAWINGS. EQUIVALENT CONNECTIONS OF OTHER MANUFACTURERS HAVING THE SAME OR BETTER CAPACITY AND HAVING APPROVED TEST REPORTS MAY BE USED. PROVIDE FULL NAILING OR BOLTING OF CONNECTIONS AS PUNCHED USING MANUFACTURER'S NAILS, SCREWS OR SPECIFIED BOLTS.
8. ALL BEAM TO POST CONNECTIONS SHALL BE SUPPORTED BY APPROPRIATELY SIZED SIMPSON CCO COLUMN CAPS.
9. NAILS WILL BE COMMON WIRE TYPE UNO, GALVANIZED IN EXTERIOR LOCATIONS & AT PT SILL. PRE-DRILL NAIL HOLES IN SEASONED DRY WOOD AS REQUIRED TO PREVENT SLITTING. WOOD SPLIT BY CONTRACTOR SHALL BE REPLACED AT CONTRACTOR'S EXPENSE.
10. UPSET THREADS ON ANCHOR BOLTS ARE NOT ALLOWED.
11. RE-TIGHTEN ALL BOLTS PRIOR TO CLOSING UP WALLS.
12. EPOXY ANCHORS AND DOWELS

12.1. EPOXY SHALL BE ONE OF THE FOLLOWING, UNO

   HILT HIT-RE 500V3 (ICC-ES REPORT ESR-3814)

12.2. RODS EMBEDDED IN EPOXY SHALL BE CARBON STEEL THREADED RODS PER THE EPOXY MANUFACTURER'S TEST REPORT

12.3. REINFORCING STEEL BARS EMBEDDED IN EPOXY SHALL BE ASTM A615, GRADE 60, UNO

STEEL AND ANCHOR BOLTS

1. DETAIL, FABRICATE, AND ERECT STRUCTURAL STEEL IN ACCORDANCE WITH THE AMERICAN INSTITUTE OF STEEL CONSTRUCTION SPECIFICATION FOR STRUCTURAL STEEL BUILDINGS (LATEST EDITION AND SUPPLEMENTS.
2. ALL STRUCTURAL STEEL SHAPES SHALL CONFORM TO ASTM A992 (FY = 50 KSI).
3. ALL TUBES SHALL CONFORM TO ASTM A500 GRADE B.
4. STEEL SHAPES AND TUBES SHALL BE HOT DIPPED GALVANIZED.
5. ALL THREADED RODS SHALL BE ASTM F1554 GRADE 105 UNLESS NOTED OTHERWISE.
6. ALL ANCHORAGE SHALL INCLUDE TAMPER RESISTANT COMPONENTS, SUCH AS LOCK NUTS ETC. - REFER TO SPECIFICATIONS.
7. ALL ANCHORAGE SHALL BE SUBMITTED TO THE OWNER FOR REVIEW AND APPROVAL BY THE ARCHITECT AND ENGINEER PRIOR TO CONSTRUCTION.
8. ANCHORAGE SHALL ONLY BE TO STRUCTURAL CONCRETE OR STEEL AS DETAILED ON PLANS - DO NOT ANCHOR TO EXISTING CEILING, WALL, EQUIPMENT, DUCTING, PIPING, OR ANY OTHER ELEMENTS NOT SPECIFICALLY DETAILED ON PLANS.

ANNOTATION LEGEND

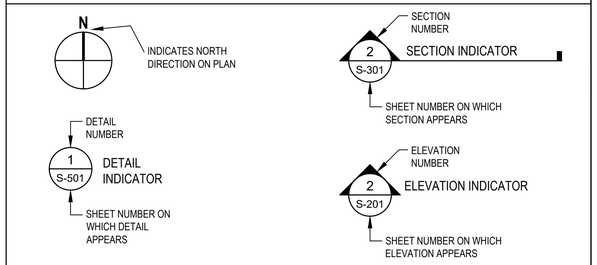

No.	Issue	Drawn	Approved	Date

Bar is one inch on original size sheet
0 — 1"

REGISTERED PROFESSIONAL ENGINEER — BRIAN L. CROWELL — No. S5216 — STRUCTURAL — STATE OF CALIFORNIA
7/20/2022

GHD Inc.
718 Third Street
Eureka California 95501 USA
T 1 707 443 8326 F 1 707 444 8330 W www.ghd.com

Drawn	H. CINKUTIS	Designer	H. CINKUTIS
Drafting Check	B. CROWELL	Design Check	B. CROWELL
Project Manager	L. HALONEN	Date	7/20/2022
This document shall not be used for construction unless signed and sealed for construction.		Scale	AS SHOWN

Client: COVELO COMMUNITY SERVICES DISTRICT
Project: COLLECTION SYSTEM & WWTP IMPROVEMENTS
Title: STRUCTURAL ABBREVIATIONS, LEGEND AND NOTES
Project No. 11216372
Original Size: ANSI D
Sheet No. S-001
Sheet 11 of 14

SHEET GENERAL NOTES

1. ENTIRE OZONE SYSTEM CANOPY & ROOF IS AN ADDITIVE BID ITEM.
2. LOCATION OF (E) UTILITIES APPROXIMATE. SEE NOTES TO CONTRACTOR BELOW.
3. POSTS, COLUMN CAPS, BASE PLATES, AND ANCHOR BOLTS TO BE HOT DIPPED GALVANIZED.

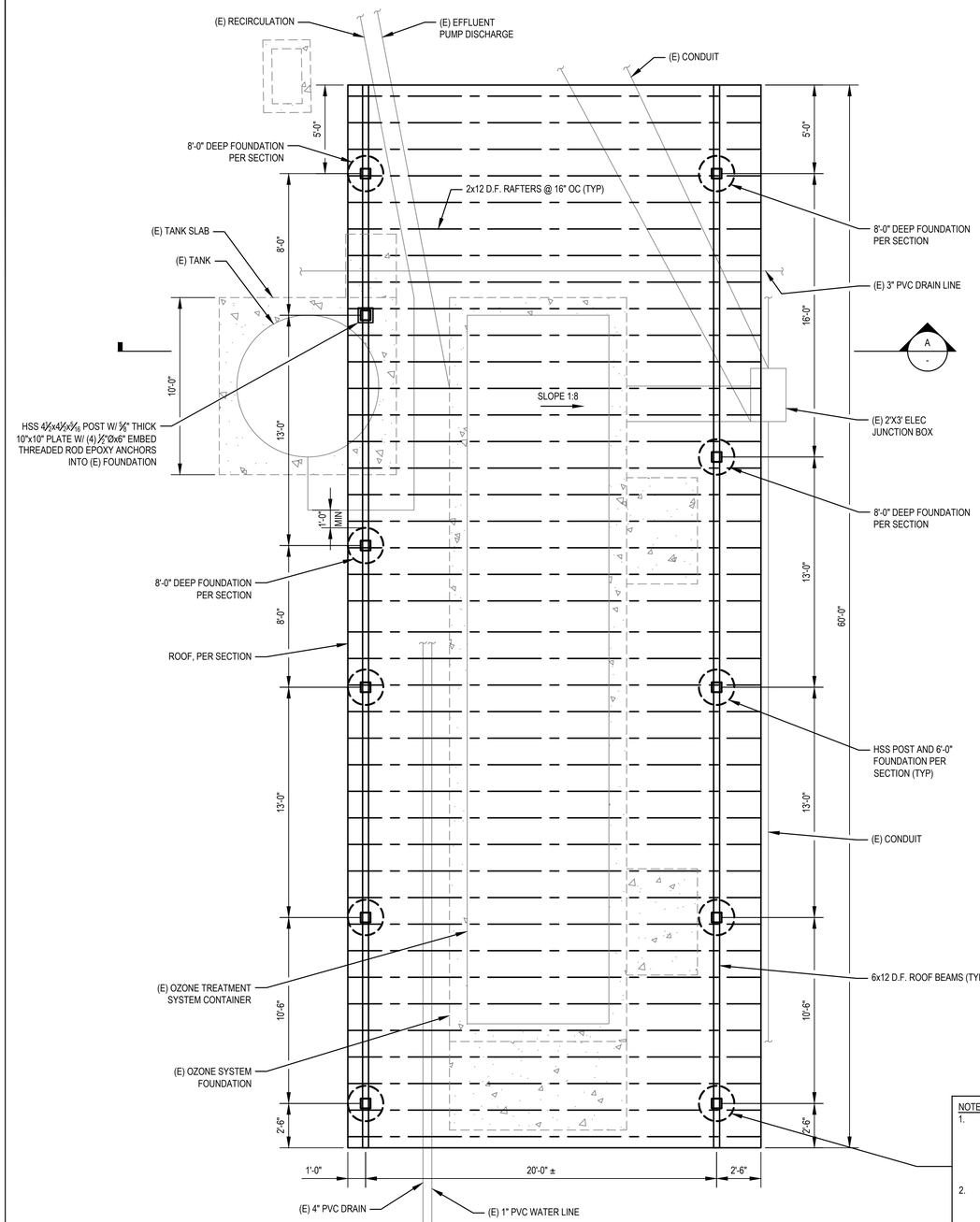

1 ROOF PLAN

SCALE: 1/4" = 1'-0"

0 2' 4' 8'

NOTES TO CONTRACTOR:

1. IN-GROUND OBSTRUCTIONS INCLUDING LARGE ROCKS, PIECES OF OLD CONCRETE, ETC. ARE TO BE EXPECTED. CONTRACTOR SHALL PROVIDE MEANS AND METHODS FOR REMOVAL, HAMMERING, DRILLING THROUGH THESE OBSTRUCTIONS TO ACHIEVE THE MINIMUM FOUNDATION SIZES AND EMBEDMENT SHOWN ON PLANS.
2. EXISTING IN-GROUND UTILITIES ARE PRESENT AT THIS SITE. CONSTRUCTOR SHALL COORDINATE WITH THE DISTRICT TO LOCATE ALL UTILITIES, INCLUDING POTHOLING AS NECESSARY, PRIOR TO COMMENCING EXCAVATION OF POLE FOUNDATIONS.

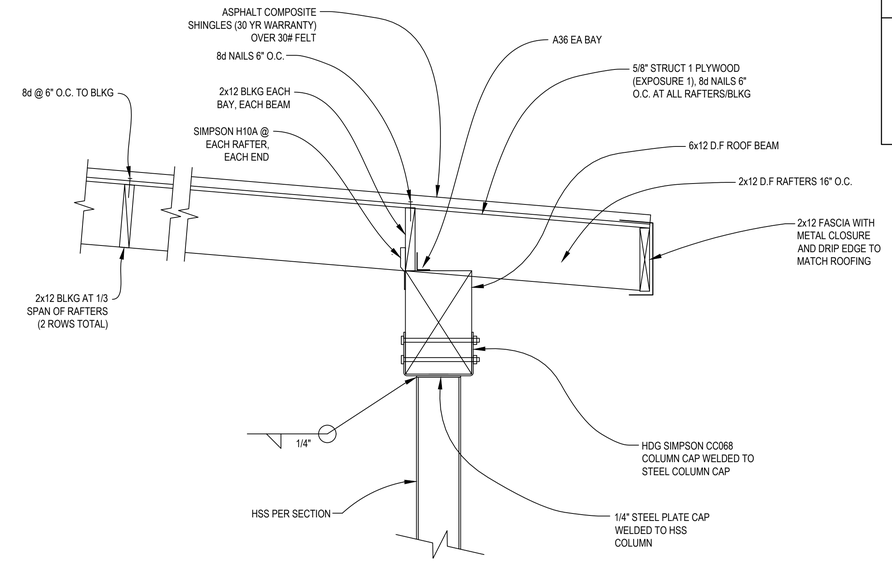

2 ROOF FRAMING

SCALE: NOT TO SCALE

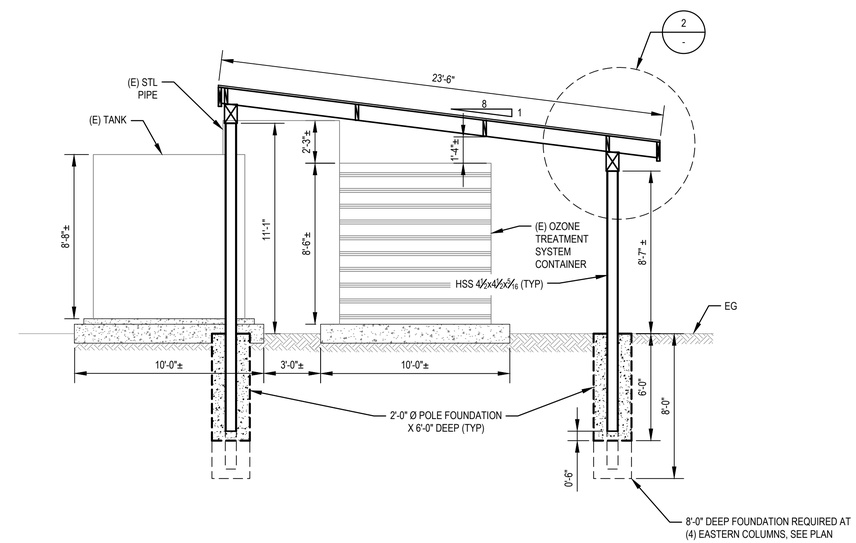

A SECTION

SCALE: 1/4" = 1'-0"

0 2' 4' 8'

No.	Issue	Drawn	Approved	Date

Bar is one inch on original size sheet

0 1"

REGISTERED PROFESSIONAL ENGINEER BRIAN L. CROWELL No. S5216 STRUCTURAL STATE OF CALIFORNIA

7/20/2022

GHD Inc.
718 Third Street
Eureka California 95501 USA
T 1 707 443 8326 F 1 707 444 8330 W www.ghd.com

Drawn	H. CINKUTIS	Designer	H. CINKUTIS
Drafting Check	B. CROWELL	Design Check	B. CROWELL
Project Manager	L. HALONEN	Date	7/20/2022
This document shall not be used for construction unless signed and sealed for construction.		Scale	AS SHOWN

Client: COVELO COMMUNITY SERVICES DISTRICT

Project: COLLECTION SYSTEM & WWTP IMPROVEMENTS

Title: CANOPY PLAN, SECTION & DETAILS

Project No. 11216372

Original Size: ANSI D

Sheet No. S-101

Sheet 12 of 14

DESIGN/BUILD PV SYSTEM NOTES

1. PROVIDE A PV SYSTEM DESIGN AND INSTALLATION, INCLUDING ALL COMPONENTS, ACCESSORIES, CONNECTORS, WIRING, PROGRAMMING AND INTERFACE TO (E) SYSTEMS FOR A COMPLETE OPERATING SYSTEM.
   1.1. NOTE THE SYSTEM VOLTAGE IS 240-VOLT 3-PHASE, DELTA CONFIGURATION WITH A "HIGH LEG" (208V TO NEUTRAL ON ONE PHASE). SELECT SINGLE OR THREE PHASE EQUIPMENT TO ACCOMMODATE THIS SYSTEM AS APPROPRIATE.

2. PV SYSTEM SHALL BE INSTALLED ON THE SHADE STRUCTURE SHOWN ON THE CIVIL PLANS AND DETAILED IN THE STRUCTURAL DRAWINGS.

3. PROVIDE UTILITY COORDINATION, INCLUDING UTILITY FORMS, APPLICATIONS, INSPECTIONS, AND ALL ASSOCIATED COMMUNICATIONS TO OBTAIN APPROVAL TO CONSTRUCT AND OPERATE THE SYSTEM. PROVIDE SUBMITTALS AND SYSTEM DOCUMENTATION TO THE UTILITY PER THEIR REQUIREMENTS.

4. GENERAL SYSTEM CONFIGURATION SHALL BE AS FOLLOWS
   4.1. APPROX. (54) 395 WATT OR LARGER PV MODULES, MOUNTED ON THE SHADE STRUCTURE
   4.2. (3) 1-PHASE OR (1) 3-PHASE INVERTER, SELECTED BY THE CONTRACTOR TO COMPLIMENT SELECTED PV MODULES AND SYSTEM VOLTAGE
   4.3. COMBINERS, DISCONNECTS, TRANSFORMERS, AND WIRING AS REQUIRED BY ELECTRICAL CODE AND UTILITY
   4.4. MOUNTING RAILS, HARDWARE, AND GROUNDING COMPONENTS AS REQUIRED AND AS DESIGNED BY THE CONTRACTOR.
   4.5. ALL EQUIPMENT SHALL BE RATED TO OPERATE IN FULL SUN EXPOSURE AT AN EXTERIOR TEMPERATURE OF 130 DEGREES F (55 DEGREES C)

5. SYSTEM SHALL MEET FOLLOWING MINIMUM STANDARDS
   5.1. PROVIDE A CALCULATED MINIMUM OUTPUT OF 30,000 KWH/YR.

6. CONTRACTOR SHALL PROVIDE COMPLETE SHOP DRAWINGS INCLUDING PRODUCT SELECTIONS, COMPONENTS AND WIRING DIAGRAMS, SYSTEM AND WIRING CALCULATIONS AND ALL REQUIRED SIGNAGE TO MEET ALL REQUIREMENTS OF THE ELECTRICAL CODE. CONTRACTOR SHALL SUBMIT THESE TO BOTH THE UTILITY AND THE OWNER FOR REVIEW AND APPROVAL.

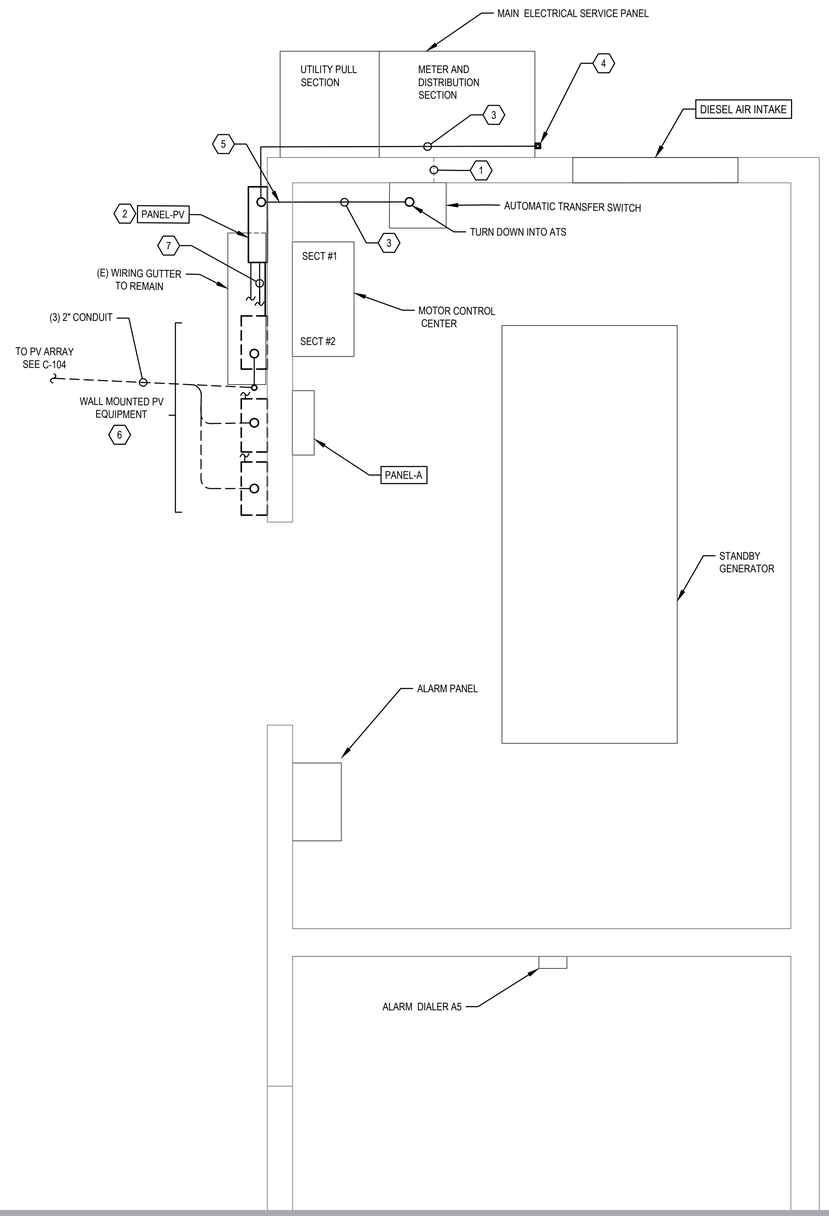

SHEET GENERAL NOTES

1. SEE SHEET E-601 FOR SINGLE LINE DIAGRAM
2. ENTIRE PV SYSTEM AND ALL ASSOCIATED WORK IS AN ADDITIVE BID ITEM.

SHEET KEYNOTES

1. DISCONNECT AND REMOVE (E) CABLING AND ABANDON CONDUIT IN PLACE.
2. PROVIDE NEMA 3R PANEL-PV AND MOUNT ON EXTERIOR WALL. SEE SINGLE LINE FOR PANEL RATINGS AND CONTENTS.
3. PROVIDE FEEDER AS INDICATED IN THE SINGLE LINE DIAGRAM.
4. TURN CONDUIT DOWN ALONG SIDE SWITCHBOARD AND PROVIDE LB FITTING TO ENTER SWITCHBOARD.
5. PROVIDE CORE DRILL FOR CONDUIT PENETRATION. LOCATE AND AVOID REINFORCING STEEL IN WALL.
6. PROVIDE PV SYSTEM EQUIPMENT IN NEMA 3R ENCLOSURES. SEE PV SYSTEM DESIGN BUILD NOTES.
7. PROVIDE PV SYSTEM FEEDERS AS REQUIRED.

0 1' 2' 4'

N

No.	Issue	Drawn	Approved	Date

Bar is one inch on original size sheet
0 1"

REGISTERED PROFESSIONAL ENGINEER
CHRISTOPHER A. RICHARDS
No. E17660
Exp. 9/30/23
ELECTRICAL
STATE OF CALIFORNIA
7/20/2022

GHD Inc.
718 Third Street
Eureka California 95501 USA
T 1 707 443 8326 F 1 707 444 8330 W www.ghd.com

This document shall not be used for construction unless signed and sealed for construction.

Drawn	A. YOUNG	Designer	C. RICHARDS
Drafting Check	E. OSORNO	Design Check	C. RICHARDS
Project Manager	L. HALONEN	Date	7/20/2022
		Scale	1/2" = 1' 0"

Client COVELO COMMUNITY SERVICES DISTRICT
Project COLLECTION SYSTEM & WWTP IMPROVEMENTS
Title ELECTRICAL POWER PLAN
Project No. 11216372
Original Size ANSI D
Sheet No. E-101
Sheet 13 of 14

Plot Date: 20 July 2022 - 2:22 PM Plotted By: Luke Halonen Filename: \\ghdnet\ghd\US\Redding\Projects\561\11216372\digital_design\acad 2020\Sheets\11216372_E-101.dwg

SHEET KEYNOTES

1. DISCONNECT AND REMOVE (E) FEEDER
2. PROVIDE (N) 24 CIRCUIT NEMA 3R 600-A 240-VOLT 3-PHASE PANEL BOARD WITH 400-A MAIN CIRCUIT BREAKER, 400-A SUBFEED CIRCUIT BREAKER AND BRANCH CIRCUIT BREAKERS TO ACCOMMODATE PV SYSTEM. PROVIDE WARNING STICKERS/LABELS INDICATING WHICH PHASE IS THE "HIGH LEG" (208V TO NEUTRAL/GND)
3. PROVIDE 20A FEEDER TO PV INVERTER, CONSISTING OF 2 #10 AWG, #10 AWG GND IN MINIMUM 3/4" CONDUIT.
4. PROVIDE DESIGN BUILD PV SYSTEM AS NOTED ON E-101.
5. PROVIDE 400-A FEEDER CIRCUIT CONSISTING OF (4) 500 KCMIL AND (1) #2 AWG GND IN MINIMUM 4" CONDUIT.
6. PROVIDE PV SYSTEM GROUNDING PER NEC REQUIREMENTS.
7. ENTIRE PV SYSTEM AND ALL ASSOCIATED WORK IS AN ADDITIVE BID ITEM.

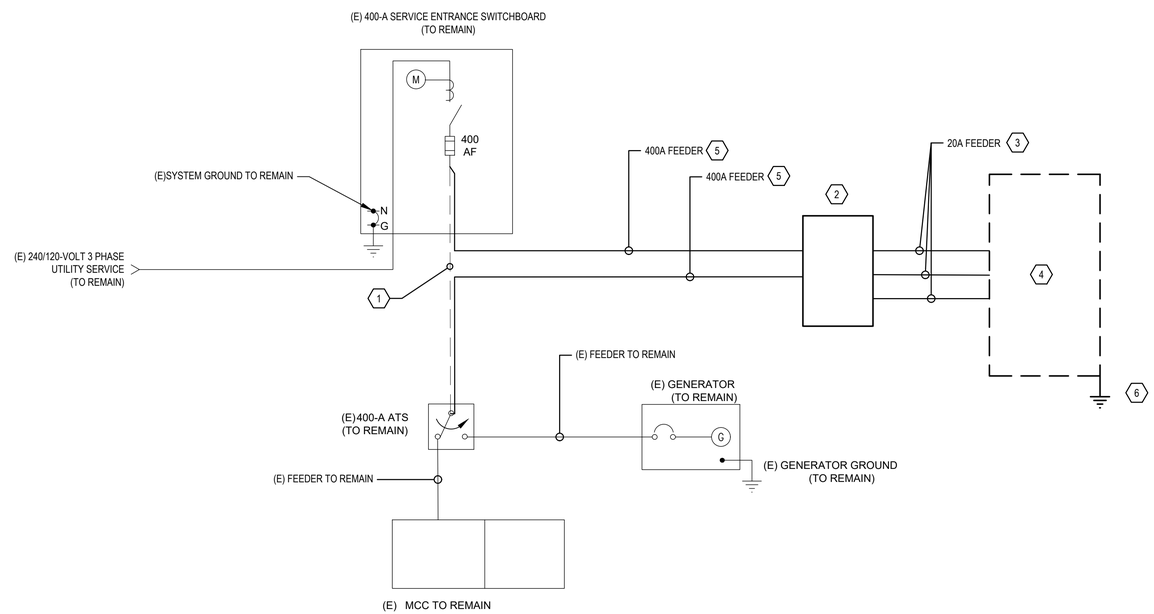

No.	Issue	Drawn	Approved	Date

Bar is one inch on original size sheet
0 1"

REGISTERED PROFESSIONAL ENGINEER A. CHRISTOPHER RICHARDS No. E17660 Exp. 9/30/23 ELECTRICAL STATE OF CALIFORNIA
7/20/2022

GHD Inc.
718 Third Street
Eureka California 95501 USA
T 1 707 443 8326 F 1 707 444 8330 W www.ghd.com

Drawn	A. YOUNG	Designer	C. RICHARDS
Drafting Check	E. OSORNO	Design Check	C. RICHARDS
Project Manager	L. HALONEN	Date	7/20/2022
This document shall not be used for construction unless signed and sealed for construction.		Scale	NO SCALE

Client / Project: COVELO COMMUNITY SERVICES DISTRICT COLLECTION SYSTEM & WWTP IMPROVEMENTS
Title: ELECTRICAL SINGLE LINE DIAGRAM
Project No. 11216372
Original Size ANSI D
Sheet No. E-601
Sheet 14 of 14